7 inch MULTIDISPLAY

FGZ201ELF2/ERF2

SERVICE MANUAL

KENWOOD

© 2003-8 CREATED IN JAPAN
B53-0084-00 (N) 0

SUBARU GENUINE

MODEL	PARTS No.
FGZ201ELF2	86281AG030
FGZ201ERF2	86281AG010

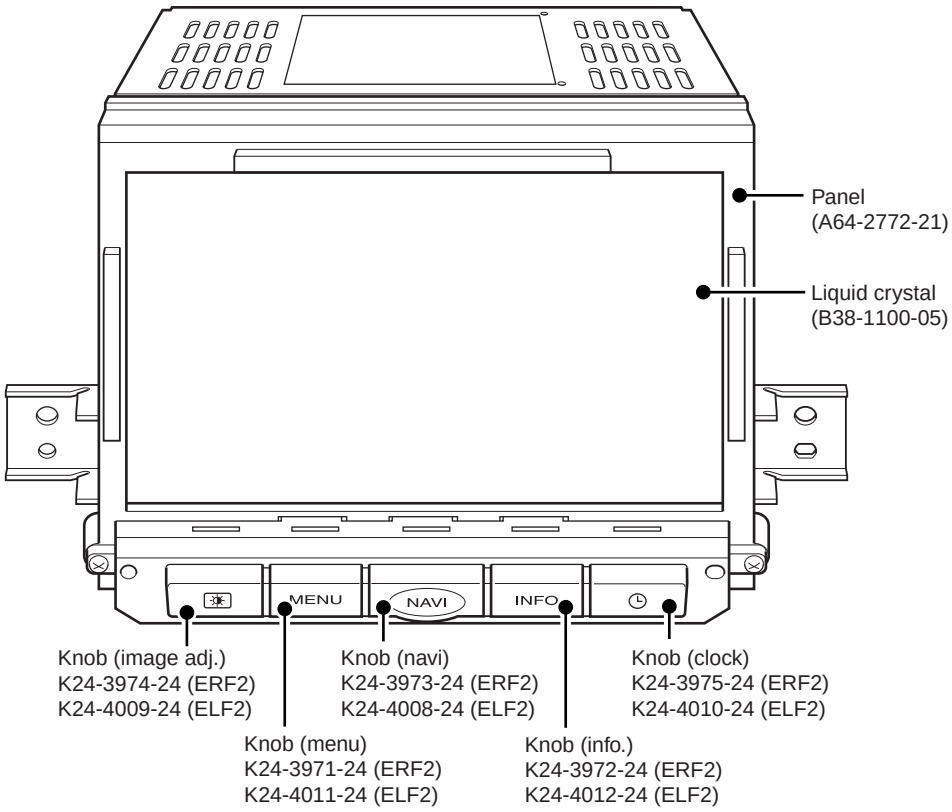

BLOCK DIAGRAM

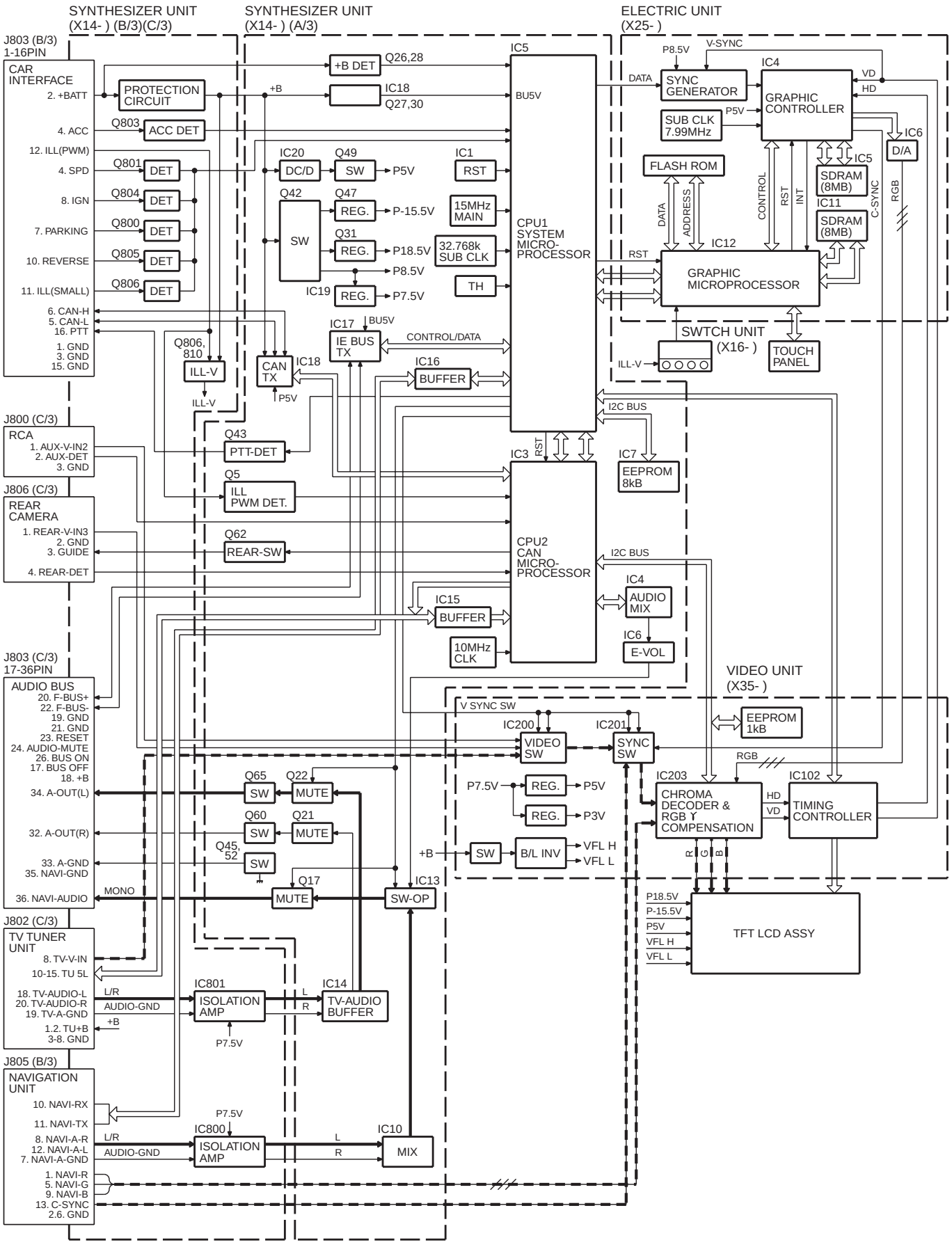

COMPONENTS DESCRIPTION

● Synthesizer unit (X14-9122-71)

Ref. No.	Component Name	Application / Function / Operation / Condition
IC1	S-80943CNMC	Reset IC (when resets at the time of backup power supply is OFF)
IC2	TC7WHU04FU	Inverter IC (audio unit control and microprocessor program writing)
IC3	M306NBFCTFP5Q0	CAN microprocessor (control of a setup and ADA voice synthesis of the connection existence distinction quality of image of a communication rear camera and an AUX terminal with a car unit and TV tuner)
IC5	M30624FGAFP9P3	System microprocessor (surveillance of communication internal electrical power source control and a power supply with the setting audio unit and NAVI unit of the control video sauce, the screen zoom, and the brightness of the control and the graphic microprocessor of a CAN microprocessor, and the abnormalities in temperature)
IC7	S-24CS08AFJ-TB	EEP-ROM (memory of a receiving TV station name and touch-panel compensation data for memory)
IC8	TJA1054	CAN transceiver (communication with a car unit)
IC9	S-80943CNMC	Reset IC (detection of the 5V power supply)
IC10	NJM4565MD	OP AMP IC (LR sound MIX of NAVI audio and bias of power supply an internal audio circuit)
IC12	TC4066BFT(N)	Analog SW (port SW at the time of microprocessor program writing)
IC13	NJM2120M	OP AMP with SW (change of a NAVI sound and an ADA sound)
IC16	TC7WH126FU	Buffer IC (the microprocessor is protected from a communication line with a NAVI unit)
IC17	HA12187FP	BUS transceiver (communication with an audio unit)
IC18	S-816A50AMC-T2	Regulator IC (5V power supply of a system microprocessor)
IC19	BA00ASFP	Regulator IC (analog system 7.5V power supply)
IC20	BA9743AFV	DC/DC controller IC (power supply of without system microprocessor and key illumination circuit)
IC21	S-80925CNMC	Reset IC (it resets at the time of the abnormal of function for system microprocessor)
IC800	TDA8579T-T	Isolation AMP (noise removal of a NAVI audio sound)
Q1	DTA124EUA	Audio MUTE SW
Q2	DTA124EUA	DC/DC controller power supply
Q32,37	2SC4081	
Q34	2SA1576A	
Q35,53	DTC144EUA	
Q36,39,41	DTA144EUA	
Q46	2SB1188(Q,R)	
Q4	DTC144EUA	Microprocessor reset SW (at the time of power-supply ON/OFF is ON : CAN microprocessor is reset mode)
Q5	DTC124EUA	Key illumination tone light detection (it turns on at the time of a illumination PWM input)
Q6	DTA124EUA	Temperature detection SW (at the time of ACC → ON is ON : temperature detection mode start)
Q7~11, Q55,56,58	DTC124EUA	Video setup SW (it is ON/OFF by screen mode and adjustment)
Q12,16	DTC144EUA	Audio control SW (at the time of the audio communication is ON : Q16 is ON, at the time of OFF : Q15 is ON)
Q15,18	DTA144EUA	
Q17	2SD2114K	Audio MUTE (at the time of power supply ON/OFF MUTE is ON)
Q50	DTA124EUA	

COMPONENTS DESCRIPTION

Ref. No.	Component Name	Application / Function / Operation / Condition
Q19	2SB1188(Q,R)	Microprocessor power supply SW (at the time of CAN microprocessor program writing is OFF)
Q25	DTC124EUA	
Q20	2SC4081	Audio SW (at the time of ADA audio out is ON)
Q24	2SC4081	Power supply voltage dropout detection (when turns off at the time of backup power supply voltage dropout)
Q26	DTC124EUA	Voltage detection (at the time of Q26 : ON backup power supply voltage detection)
Q28	2SA1576A	
Q29	2SC4081	Constant voltage power supply (backup 5V power regulator)
Q30	2SB1203-FA	
Q64	2SA1576A	
Q31	FMY6	Constant voltage power supply (at the time of Q61 is ON : +18.5V output)
Q57	2SA1576A	
Q61	DTC144EUA	
Q33	2SA1576A	Over-current detection (at the time of 18.5V over-current detection the controller power supply is OFF)
Q38	IMT1A	Over-current detection (at the time of 8.5V over-current detection the controller power supply is OFF)
Q40	FMY6	DC/DC switching (primary side switching of a transformer)
Q42	2SJ327Z	
Q43	FMY6	DC/DC switching (switching of 5V power supply)
Q49	2SJ327Z	
Q44	2SC4081	Over-current detection (at the time of -15.5V over-current detection the controller power supply is OFF)
Q47	FMY6	Constant voltage power supply (-15.5V constant voltage power supply)
Q48	IMT1A	Over-current detection (at the time of 5V over-current detection the controller power supply is OFF)
Q66,67	DTA144EUA	Timer (at the time of a system microprocessor reckless run Q67 is OFF)
Q68,69	DTC144EUA	
Q700,701	2SC4081	Audio connection detection (at the time of audio connection Q700 is ON)
Q702	DTA124EUA	
Q800	DTA124EUA	PARKING detection (at the time of car PARKING is ON)
Q801	DTA124EUA	Speed detection (at the time of a speed pulse input is ON)
Q802	DTC124EUA	Reset input (at the time of Q802 ON when system microprocessor is reset mode)
Q803	2SC4081	ACC detection (at the time of car ACC → ON : ON)
Q804	2SC4081	IGN detection (at the time of car Ignition → ON : ON)
Q805	2SC4081	Reverse detection (at the time of car reverse : ON)
Q806	2SC4081	SMALL detection (at the time of car SMALL → ON : ON)
Q807,809	DTA124EUA	Key illumination tone light power supply regulator (it is illumination VCC (7V) with the duty cycle according to PWM output)
Q808,811	2SC4081	
Q810	2SB1203-FA	

COMPONENTS DESCRIPTION

● Electric unit (X25-9412-71)

Ref. No.	Component Name	Application / Function / Operation / Condition
IC2	TC9246F	PLL Oscillator IC
IC3	TC7SHU04F	Inverter (DOT CLOCK)
IC4	HD64412FI	Graphic control IC
IC5	MSM5118165FP60	The memory for graphic control IC
IC6	BU3616K	Video D/A converter
IC7	TC7SHU04F	Inverter (DACK SIGNAL)
IC10	TC7SH32FU	OR gate IC
IC11	MSM5118165FP60	The memory for graphic microprocessors
IC12	HD6437041AG57E	Graphic microprocessor
IC19	MBM29F160TE9P6	Graphic bitmap data & program data memory
IC20	TC7SHU04F	Inverter (SYNC. SIGNAL)
IC22	TC7SHU04F	Inverter
IC23	TC7SET08FU	AND gate
IC24	MSM5258MS-K	Synchronized signal generator
IC26	TA78DS05F	5V AVR
IC27,28	TC7SHU04F	Inverter (SYNC. SIGNAL)
Q2,3	DTC124EUA	The transistor for touch-panel detection
Q4,5	DTA124EUA	

● Video unit (X35-4250-00)

Ref. No.	Component Name	Application / Function / Operation / Condition
IC31	TL5001ID	Switching regulator (for back light 7.5V power supply)
IC101	NJM2107F	Operational amplifier (oscillating circuit : low path output)
IC102	TC160G11AF1146	Timing controller (LCD driver IC)
IC200,201	NJM2535V	Video switch (input video signal change)
IC202	NJW1303V	Synchronous separation
IC203	AN2546FH-A	Chrome decoder, gamma correction (an input video signal conversion to LCD drive signal)
IC205	S-24C01B	EEP-ROM (I2C memory backup)
IC207	NJM4580V	Operational amplifier (V-COM buffer)
IC209	TC7W34FU	Buffer containing 3 circuits (synchronized signal output buffer)
IC211	NJU7222U30	3V Regulator
IC212	NJU7223DL1-50	5V Regulator
IC217	TC7S14F	Inverter (for side black reverse signal)
Q1	2SC4081	ACC ON/OFF SW (for back light power supply)
Q2	2SB1203-FA	+B SW (for back light power supply)
Q3	DTA124EUA	ACC ON/OFF SW (for back light power supply)
Q4	DTC124EUA	

COMPONENTS DESCRIPTION

Ref. No.	Component Name	Application / Function / Operation / Condition
Q31	2SC4081	SW REG Output (FET drive)
Q32	2SA1576A	SW REG Output (FET drive)
Q33	2SJ327Z	DC/DC converter SW (for back light power supply)
Q35,36	2SD1803	Inverter oscillation change SW
Q37	2SD1803	Back light tone light (for PWM pules drive)
Q38	DTA124EUA	Back light tone light (for PWM pules drive)
Q39	DTC124EUA	Back light tone light (for PWM pules drive)
Q40	2SA1576A	Transistor for over-current protection (back light power supply)
Q41	2SC4081	An over-current for over voltage protection (back light power supply)
Q42	2SJ327Z	FET for the back light lighting SW
Q43	DTC124EUA	The transistor for the back light lighting SW
Q101	2SC2411K	Transistor for oscillating circuits (a timing controller for a standard oscillation)
Q102	DTC124EUA	LCD reverse signal control (LCD up-and-down side reverse control transistor)
Q203	2SC4097	V-COM buffer
Q204	2SA1577	V-COM buffer
Q205	2SC4081	Video signal buffer
Q206	2SA1576A	Video signal buffer
Q209,210	DTC124EUA	Synchronized signal muting (timing controller : at the time of adjustment muting)
X200	L78-0549-05	Synchronous separation reference oscillator (15.734kHz)
X201	L77-2818-05	Color reference oscillator (3.58MHz)

MICROCOMPUTER'S TERMINAL DESCRIPTION

● System microprocessor : M30624FGAFP9P3 (X14-9122-71 : IC5)

Pin No.	Pin Name	I/O	Purpose / Description / Processing / Operation
1	C-SYSDATA	O	System microprocessor data output
2	CANCLK	O	System microprocessor clock output
3	SPD	I	Speed pulse input
4	PON2	O	PON7.5V control output
5	PON3	O	PON18.5V control output
6	WDP	O	Watch dog pulse output
7	PTT	O	The PTT output for a telephone
8	BYTE	-	Un-connecting
9	CNVSS	-	It is high at the time of rewriting
10	XCIN	I	Sub clock input
11	XCOUT	O	Sub clock output
12	$\overline{\text{RESET}}$	I	Reset input
13	XOUT	O	Clock output
14	VSS	-	Ground
15	XIN	I	Clock input
16	VCC	-	Power supply
17	$\overline{\text{NMI}}$	I	Interruption input
18	$\overline{\text{CANREQ}}$	I	System microprocessor Request-to-Send input
19	NC	-	Un-connecting
20	$\overline{\text{CANCON}}$	O	CAN microprocessor control output
21	AUDIO-BUS+	I	AUDIO BUS communication end detection input
22	$\overline{\text{BUS_ON_REQ}}$	I	AUDIO BUS ON detection input
23	$\overline{\text{BUS_OFF_REQ}}$	I	AUDIO BUS OFF detection input
24	BRIGHT	O	BRIGHT control output
25~27	NC	-	Un-connecting
28	$\overline{\text{STB}}$	O	AUDIO BUS communication standby output
29	SI	I	AUDIO BUS communication data reception input
30	SO	O	AUDIO BUS communication data transmitting output
31	NAVI-TXD	O	Usually, a NAVI communication transmitting data output
32	NAVI-RXD	I	It is NAVI communication receiving data input at the time of usual
33	BUS_SYS_ON	O	It is an AUDIO BUS system-on output at the time of usual
34	BUS_SYS_OFF	O	AUDIO BUS system-off output
35	SYSDATA	O	System microprocessor data output
36	SHDATA	I	System microprocessor data input
37	SHCLK	O	System microprocessor clock output
38	$\overline{\text{SHRST}}$	O	Graphic microprocessor reset output
39	$\overline{\text{SHINI}}$	O	Graphic microprocessor initial output
40	SHRDY	I	The notice input of a state which can be graphic communicated
41	EPM	I	Flash write-in EPM input

MICROCOMPUTER'S TERMINAL DESCRIPTION

Pin No.	Pin Name	I/O	Purpose / Description / Processing / Operation
42	$\overline{\text{SHCON}}$	O	Graphic microprocessor standby control output
43	SHSTBY	I	The completion input of graphic microprocessor standby shift
44	$\overline{\text{SYSCS}}$	O	System microprocessor Request-to-Send output
45	SH_VMUTE	I	Graphic microprocessor image muting demand input
46	CE	I	Flash write-in CE input
47	$\overline{\text{TOUCH_EN}}$	O	Graphic microprocessor touch key analysis permission output
48	TOUCH	I	Notice input of graphic microprocessor touch key-on
49	PLLCE	O	The clock generating IC mode output for Q2i
50	PLLSDA	O	The clock generating IC data output for Q2i
51	PLLSCK	O	The clock generating IC clock output for Q2i
52	BL-ON	O	Back light switch output
53	VIDEO Swa	O	TV/REAR changeover switch output
54	NC	-	Un-connecting
55	VIDEO SWb	O	DVD changeover switch output
56	SYNC Swa	O	VIDEO/NAVI SYUn-connecting changeover switch output
57	SYNC SWb	O	GRAPHICS SYUn-connecting changeover switch output
58	VIDEO SWc	O	DVD-CH/NAVI-AUX changeover switch output
59	VIDEO SWd	O	AUX changeover switch output
60	HPOSI1	O	Level position adjusted power
61	HPOSI2	O	Level position adjusted power
62	VCC	-	Power supply
63	SCAN1	O	Screen mode changeover switch output
64	VSS	-	Ground
65	SCAN2	O	Screen mode changeover switch output
66	NTSC/$\overline{\text{PAL}}$	O	NTSC/PAL changeover switch output
67	$\overline{\text{VMUTE}}$	O	Video muting control output
68	+BDET SW	O	+B voltage detector circuit control output
69	$\overline{\text{REV}}$	I	Reverse detection input
70	PARKING	I	Parking detection input
71	P-ON	O	Power supply control output
72	FAULT	O	FAULT display output
73	$\overline{\text{ACC}}$	I	ACC voltage detection input
74	BUDET	I	+B voltage variation detection input
75	$\overline{\text{SHCS}}$	I	Graphic microprocessor Request-to-Send input
76	IGN	I	Ignition voltage detection input
77	ADA-INT	O	NAVI voice changeover switch output
78	AUDIO-MUTE	O	AUDIO muting signal output
79	$\overline{\text{TV}}$	O	TV voice muting output
80	$\overline{\text{MUTE1}}$	O	MUTE1 signal output
81	TYPE0	I	It forces and is a setting input

MICROCOMPUTER'S TERMINAL DESCRIPTION

Pin No.	Pin Name	I/O	Purpose / Description / Processing / Operation
82	TYPE1	I	It forces and is a setting input
83	$\overline{\text{MUTE2}}$	O	MUTE2 signal output
84	E2PSCL	O	IIC clock output
85	E2PSDA	O	IIC data input and output
86	$\overline{\text{INH}}$	-	Un-connecting.
87	HPOSI3	O	Level position adjusted power
88	HPOSI4	O	Level position adjusted power
89	$\overline{\text{AUDIODET}}$	I	Audio voltage detection input
90	TEMPDET	I	High temperature temperature detection input
91	BLDET2	I	Back light voltage detection input
92	BLDET	I	Back light voltage detection input
93	+BDET	I	+B voltage detection input
94	$\overline{\text{DC/DC DET}}$	I	PON5V voltage detection input
95	CANRESET	O	CAN microprocessor reset output
96	AVSS	I	Analog grand input
97	C-SYSREQ	O	System microprocessor Request-to-Send output
98	VREF	-	Reference voltage
99	AVCC	-	Analog power supply
100	CANDATA	I	System microprocessor data input

● Graphic microprocessor : HD6437041AG57E (X25-9412-71 : IC12)

Pin No.	Pin Name	I/O	Purpose / Description / Processing / Operation
1~5	NC	-	Un-connecting
6	VSS	-	Ground
7~11	A0~A4	O	Address bus output
12	VCC	-	Power supply
13	A5	O	Address bus output
14	VSS	-	Ground
15~25	A6~A16	O	Address bus output
26	VCC	-	Power supply
27	A17	O	Address bus output
28	VSS	-	Ground
29, 30	NC	-	Un-connecting
31	RAS	O	DRAM row address Strobe output
32	CASL	O	DRAM low rank side column address Strobe output
33	NC	-	Un-connecting
34	CASH	O	DRAM higher rank side column address Strobe output
35	VSS	-	Ground
36	RDWR	O	DRAM write-in Strobe output

MICROCOMPUTER'S TERMINAL DESCRIPTION

Pin No.	Pin Name	I/O	Purpose / Description / Processing / Operation
37~39	A18~A20	O	Address bus output
40	VCC	-	Power supply
41	A21	O	Address bus output
42	VSS	-	Ground
43	RD	O	External device read-out Strobe output
44	NC	-	Un-connecting
45	SH_VMUTE	O	Graphic microprocessor video mute request output
46	NC	-	Un-connecting
47	WRH	O	An external device higher rank side write-in output
48	WRL	O	An external device low rank side write-in output
49	CS1	O	Chip selection output (inside register of Q2i)
50	CS0	O	Chip selection output (flash ROM)
51~53	NC	-	Un-connecting
54	CS2	O	Chip selection output (Q2iUGM)
55	VSS	-	Ground
56	ROM_RESET	O	Flash ROM reset output
57	ROM_RY/BY	I	Flash ROM lady busy input
58	NC	-	Un-connecting.
59	DACK	O	Q2iDMA transmission Strobe output
60	NC	-	Un-connecting.
61	VSS	-	Grand input
62	DREQ	I	Q2iDMA transmission demand input
63	VCC	-	Power supply
64~68	NC	-	Un-connecting.
69	SYSCS	I	Graphic microprocessor Request-to-Send input
70	IRL	I	Q2i interrupt request input
71	VSS	-	Ground
72	SHCON	I	Graphic microprocessor standby control input
73~76	D12~D15	I/O	Data bus input and output
77	VCC	-	Power supply
78	D11	I/O	Data bus input and output
79	VSS	-	Ground
80~84	D6~D10	I/O	Data bus input and output
85	VCC	-	Power supply
86	D5	I/O	Data bus input and output
87	VSS	-	Ground
88~92	D0~D4	I/O	Data bus input and output
93	VSS	-	Ground
94	XTAL	I	Crystal oscillator input
95	MD3	I	Mode setting input of operation

MICROCOMPUTER'S TERMINAL DESCRIPTION

Pin No.	Pin Name	I/O	Purpose / Description / Processing / Operation
96	EXTAL	I	Crystal oscillator input
97	MD2	I	Mode setting input of operation
98	NMI	I	Non maskable interrupt input
99	VCC	-	Power supply
100	NC	-	Un-connecting
101	WAIT	I	Q2i wait cycle insertion input
102	MD1	I	Mode setting input of operation
103	MD0	I	Mode setting input of operation
104	PLLVCC	I	The power supply input for built-in PLL
105	PLLCAP	I	The capacity input for built-in PLL
106	PLLVSS	I	The grand input for built-in PLL
107	NC	-	Un-connecting
108	SHRST	I	Reset input
109~111	NC	-	Un-connecting
112	VCC	-	Power supply
113	Y-	O	The switching output for a touch-panel input
114	X-	O	The switching output for a touch-panel input
115	Y+	O	The switching output for a touch-panel input
116	X+	O	The switching output for a touch-panel input
117	VSS	-	Ground
118	KEYDATA1	I	Touch-panel data input (Y)
119	KEYDATA2	I	Touch-panel data input (X)
120	NC	-	Un-connecting.
121	KEY5	I	Key switch input
122	KEY4	I	Key switch input
123	KEY3	I	Key switch input
124	AVSS	-	Analog ground
125	KEY2	I	Key switch input
126	KEY1	I	Key switch input
127	VREF	-	Reference voltage
128	AVCC	-	Analog power supply
129	VSS	-	Ground
130	SYSDATA	I	Graphic microprocessor data input
131	SHDATA	O	Graphic microprocessor data output
132	SYSCLK	I	Graphic microprocessor clock input
133	ROM_RXD	I	Flash ROM write-in data input
134	ROM_TXD	O	Flash ROM write-in data output
135	VCC	-	Power supply
136	SHSTBY	O	The completion output of graphic microprocessor standby shift
137	TOUCH	O	Notice output of graphic microprocessor touch key-on

MICROCOMPUTER'S TERMINAL DESCRIPTION

Pin No.	Pin Name	I/O	Purpose / Description / Processing / Operation
138	SHCS	O	System microprocessor Request-to-Send output
139	NC	-	Un-connecting
140	SHRDY	O	The notice output of a state which can be graphic microprocessor communicated
141	VSS	I	Grand input
142	NC	-	Un-connecting
143	TOUTH_EN	I	Graphic microprocessor touch key analysis permission input
144	SHINI	I	Graphic microprocessor initial input

● Graphic control IC : HD64412FI (X25-9412-71 : IC4)

Pin No.	Pin Name	I/O	Purpose / Description / Processing / Operation
1	$\overline{\text{DREQ}}$		DMA request
2	D0	O	CPU data input and output
3	D1	O	CPU data input and output
4	CVCC1	-	Power supply
5	D2	I/O	CPU data input and output
6	CGND1	-	Ground
7~11	D3~D7	O	CPU data input and output
12	CGND2		Grand input
13	D8		CPU data input and output
14	D9		CPU data input and output
15	D10		CPU data input and output
16	CVCC2	-	Power supply
17, 18	D11, D12	I/O	CPU data input and output
19	CGND3	-	Ground
20~22	D13~D15	I/O	CPU data input and output
23	PGND	-	Ground
24	CAP0	-	The external capacity terminal for multiplication circuit
25	PVCC	-	Power supply
26	$\overline{\text{CS0}}$	I/O	Chip selection 0 (UGM)
27	$\overline{\text{CS1}}$	I/O	Chip selection 1 (internal register)
28	$\overline{\text{RD}}$		Lead Strobe
29	$\overline{\text{WE0}}$		The write-in pulse 0 (low rank side)
30	$\overline{\text{WE1}}$		The write-in pulse 1 (higher rank side)
31	$\overline{\text{DACK}}$		DMA acknowledge
32	MODE0	I	Mode terminal 0 of operation
33	MODE1	I	Mode terminal 1 of operation
34	MODE2	I	Mode terminal 2 of operation
35	TEST	I	Test terminal
36	$\overline{\text{RESET}}$	I	Reset

MICROCOMPUTER'S TERMINAL DESCRIPTION

Pin No.	Pin Name	I/O	Purpose / Description / Processing / Operation
37	CLK0		Q2i operation clock
38	GND1	-	Grand input
39, 40	A1, A2	I	CPU address input
41	VCC1	-	Power supply input
42~49	A3~A10	I	CPU address input
50	GND2	-	Ground
51~60	A11~A20	I	CPU address input
61, 62	A21, A22	-	Un-connecting
63	GND3	-	Ground
64~68	MD0~MD4	I/O	Memory data input and output
69	GND4	-	Ground
70	MD5	I/O	Memory data input and output
71	VCC2	-	Power supply
72~78	MD6~MD12	I/O	Memory data input and output
79	GND5	-	Ground
80, 81	MD13, MD14	I/O	Memory data input and output
82	VCC3	-	Power supply
83	MD15	I/O	Memory data input and output
84	$\overline{\text{MWE}}$		A memory write-in pulse
85	$\overline{\text{MRAS0}}$		A low selection signal
86	$\overline{\text{MRAS1}}$		A low selection signal
87	$\overline{\text{MLCAS}}$		Low rank side column selection signal
88	$\overline{\text{MUCAS}}$		Higher rank side column selection signal
89	GND6	-	Ground
90	$\overline{\text{MOE}}$		Memory read-out pulse
91~93	MA0~MA2	O	Memory address output
94	VCC4	-	Power supply
95~98	MA3~MA6	O	Memory address output
99	GND7	-	Grand input
100~104	MA7~MA11	O	Memory address output
105	GND8	-	Ground
106	CLK1		The dot clock for a display
107	VCC5	-	Power supply
108	FCLK		1/2 display dot clock
109	$\overline{\text{ODDF}}$		The pulse which shows the odd number field
110	GND9	-	Ground
111	DCLK	O	Display clock output
112	CDE		Color detection
113	VCC6	-	Power supply
114	DISP		Display period pulse

MICROCOMPUTER'S TERMINAL DESCRIPTION

Pin No.	Pin Name	I/O	Purpose / Description / Processing / Operation
115	$\overline{\text{CSYNC}}$	O	Composite synchronize signal output
116	GND10	-	Ground
117	$\overline{\text{HSYNC}}$	O	Horizontal synchronize signal output
118	$\overline{\text{VSYNC}}$	O	Vertical synchronize signal output
119~121	DD0~DD2	O	Display data output
122	GND11	-	Ground
123~125	DD3~DD5	O	Display data output
126	VCC7	-	Power supply
127, 128	DD6, DD7		Display data output
129	GND12	-	Ground
130~134	DD8~DD12	O	Display data output
135	GND13	-	Ground
136	DD13	O	Display data output
137	VCC8	-	Power supply
138~141	DD14~DD17	O	Display data output
142	CGND4	-	Ground
143	$\overline{\text{IRL}}$		Interrupt request
144	$\overline{\text{WAIT}}$		CPU weight

ADJUSTMENT

● Video unit (X35-4250-00)

- Start a set in test mode at the time of video board adjustment.
- How to enter to test mode : Pushing operation of 2 keys right (clock)-and-left (image adj.) both ends side and a touch panel. And supply to power is ON.
- After starting : perform substrate adjustment for a video board by a design mode → VIDEO ADJ key with reference to the following item.
- Adjust a picture position by After starting : (AUX) Manufacture mode → POSI (NAVI)
- VIDEO ADJ mode : it is the rectangle color frog of middle at the time of adjustment item selection. It is considered as an adjustment end by choosing a rectangle again after adjustment.

No.	Adjustment item	The adjustment method	Adjustment part	Adjustment value	Conditions	Test point
1	Inverter power regulation	It is considered as Bright : DUTY 100% after VIDEO ADJ - key selection. The voltage of TP577 at this time is adjusted to 7.5±0.1V.	VR30	7.5±0.1V	-	TP577
2	Timing controller free-run frequency	f Consider it as microcomputer : SYNC (9 pin : TP138 of IC102) MUTE → H after Adj key selection. VR101 (H-FREE) is turned and the frequency of the NDSH output at this time is adjusted to 15.734±0.01kHz.	VR101	15.734±0.01kHz	Input selector : AUX input non-signal	TP138
3	Chrome IC adjustment	It is made the chroma IC adjustment mode of a static test mode.	-	-	Input selector : AUX or RGB	-
3-A	Chrome VCO adjustment	1 of IC202, 4, and 5 pin are dropped on GND, and a touch panel adjusts TP320 in f shop counter. - Carry out the monitor of TP138 of IC102, and adjust VR101 in f shop counter.	CH16	15.734±0.01kHz	An input non-signal	TP320
3-B	Black limiter	Carry out the monitor of the waveform of TP527 with an oscilloscope. Adjst the amplitude value so that the waveform between the pedestal to the negative pedestal is 3.5V±0.1V.	CH5	3.5V±0.1V	Incoming signal : 10 STEP (NTSC) /RGB	TP527
3-C	White limiter	Carry out the monitor of the waveform of TP527 with an oscilloscope. Adjst the amplitude value so that the waveform between the 8 step signal to the negative 8 step signal is 3.5V±0.1V.	CH10	3.5V±0.1V	Incoming signal : 10 STEP (NTSC) /RGB	TP527

ADJUSTMENT

No.	Adjustment item	The adjustment method	Adjustment part	Adjustment value	Conditions	Test point
3-D	Bright adjustment	Carry out the monitor of the waveform of TP527 with an oscilloscope. Adjst the amplitude value so that the waveform between the 2 step signal to the negative 2 step signal is 2.5V±0.1V.	CH6	2.5V±0.1V	Incoming signal : 10 STEP (NTSC) /RGB	TP527
3-E	Contrast	Carry out the monitor of the waveform of TP527 with an oscilloscope. Adjst the amplitude value so that the waveform between the 9 step signal to the negative 9 step signal is 3.0V±0.1V.	CH13	3.0V±0.1V	Incoming signal : 10 STEP (NTSC) /RGB	TP527
3-F	Gamma 1	Carry out the monitor of the waveform of TP527 with an oscilloscope. Adjst the amplitude value so that the waveform between the pedestal to the 3 step signal is 1.2V±0.1V.	CH11	1.2V±0.1V	Incoming signal : 10 STEP (NTSC) /RGB	TP527
3-G	Gamma 2	Carry out the monitor of the waveform of TP527 with an oscilloscope. Adjst the amplitude value so that the waveform between the pedestal to the 10 step signal is 2.9V±0.1V.	CH12	2.9V±0.1V	Incoming signal : 10 STEP (NTSC) /RGB	TP527
3-H	Y gain	Carry out the monitor of the waveform of TP527 with an oscilloscope. Adjst the amplitude value so that the waveform between the pedestal to the 9 step signal is 2.3V±0.1V.	CH2	2.3V±0.1V	Incoming signal : 10 STEP (NTSC) /AUX	TP527
3-I	R sub bright	Carry out the monitor of the waveform of TP528 with an oscilloscope. Adjst the amplitude value so that the waveform between the 2 step signal to the negative 2 step signal is 2.1V±0.1V.	CH8	2.1V±0.1V	Incoming signal : 10 STEP (NTSC) /RGB	TP528
3-J	B sub bright	Carry out the monitor of the waveform of TP526 with an oscilloscope. Adjst the amplitude value so that the waveform between the 2 step signal to the negative 2 step signal is 2.1V±0.1V.	CH9	2.1V±0.1V	Incoming signal : 10 STEP (NTSC) /RGB	TP526

ADJUSTMENT

No.	Adjustment item	The adjustment method	Adjustment part	Adjustment value	Conditions	Test point
3-K	R sub contrast	Carry out the monitor of the waveform of TP528 with an oscilloscope. Adjst the amplitude value so that the waveform between the 10 step signal to the negative 10 step signal is 2.2V±0.1V.	CH14	2.2V±0.1V	Incoming signal : 10 STEP (NTSC) /RGB	TP528
3-L	B sub contrast	Carry out the monitor of the waveform of TP526 with an oscilloscope. Adjst the amplitude value so that the waveform between the 10 step signal to the negative 10 step signal is 2.2V±0.1V.	CH15	2.2V±0.1V	Incoming signal : 10 STEP (NTSC) /RGB	TP526
3-M	VCOM	Carry out the monitor of the waveform of TP517 with an oscilloscope. The amplitude of the adjst the wave of VCOM is 5.8V±0.1V	CH1	5.8V±0.1V	Incoming signal : 10 STEP (NTSC) /RGB	TP517
4	Screen display starting position adjustment	A menu mode -- returning -- POSI of manufacture MODE (NAVI) MENU -- or (AUX) it chooses. Screen position adjustment of the position adjustment is carried out by a touch panel.	Panel top icon	It adjusts so that the position of the picture in a screen may become in the center.	Mono range	Screen
5	Flicker	It adjusts so that the flicker level will be minimum on screen.	VR102	Flicker minimum	Gray drawing	Screen
6	Touch-panel	After usually starting a set in the mode and pressing an information key, a SET icon and a touch compensation icon are chosen. The target which appeared in the screen is pushed in order of the lower left and the upper right.	Panel top icon	-	-	Screen

FGZ201ELF2/ERF2

PC BOARD (COMPONENT SIDE VIEW)

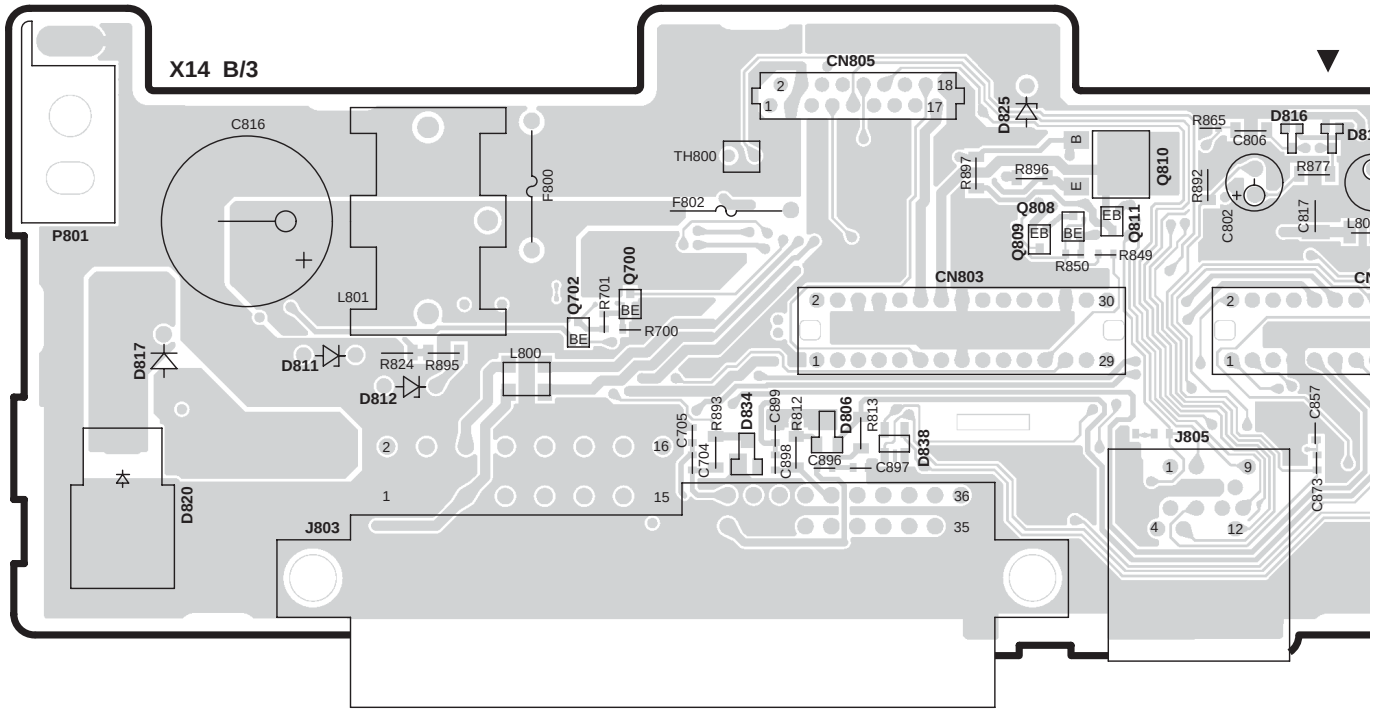

SYNTHESIZER UNIT X14-9122-71 A/3 (J74-1395-22)

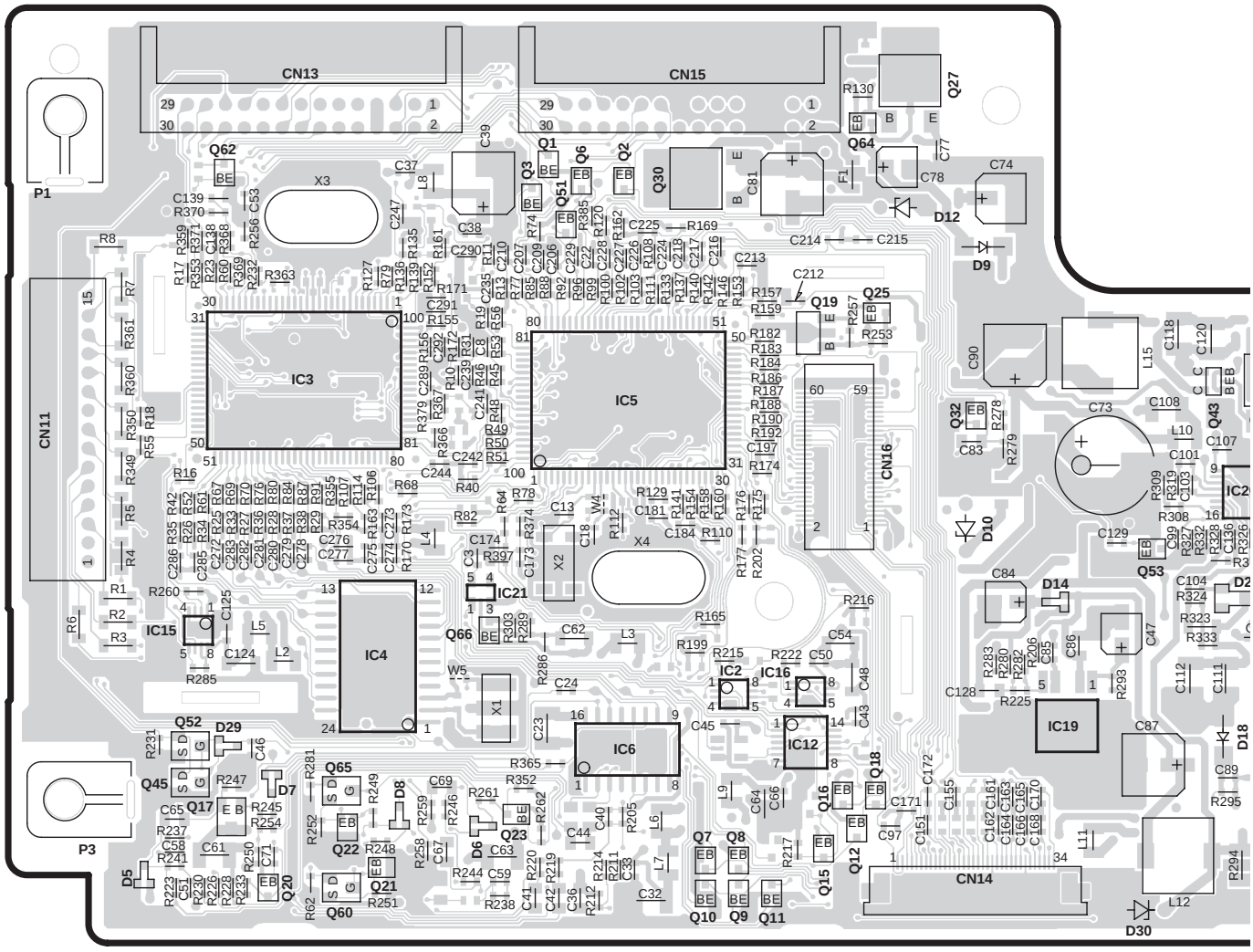

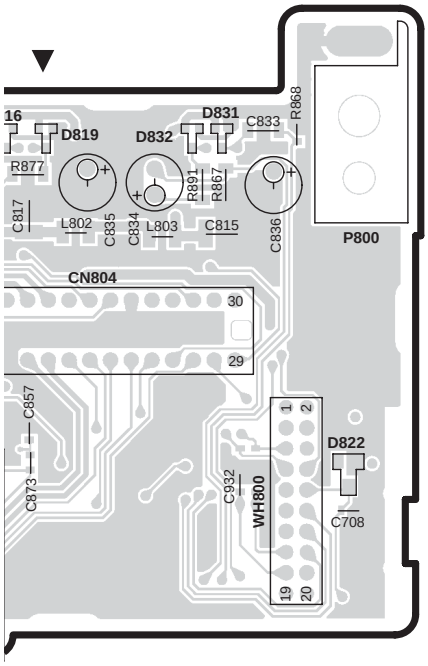

X14 C/3

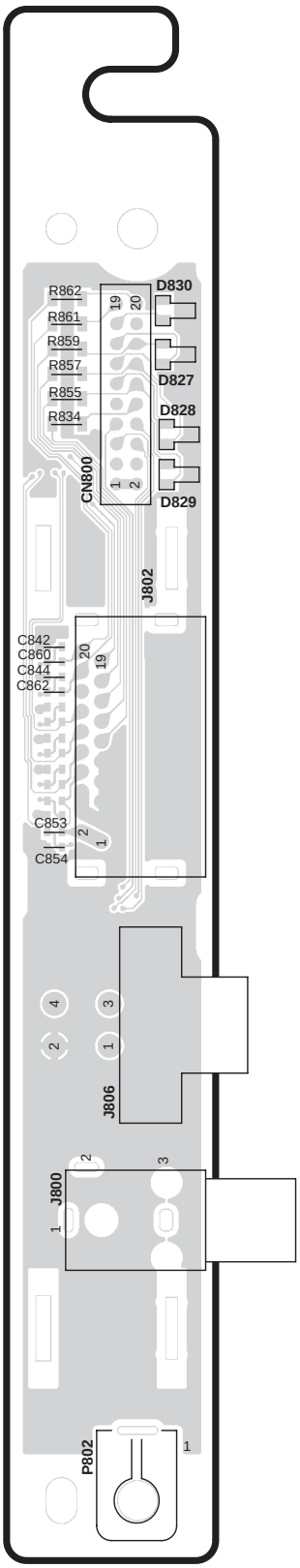

X14-9122-71

Ref No.	Address
IC2	6D
IC3	5B
IC5	5C
IC12	6D
IC16	6D
IC19	6E
IC20	5F
IC21	6C
Q1	4C
Q2	4C
Q6	4C
Q7	7C
Q8	7D
Q9	7D
Q10	7C
Q11	7D
Q12	7D
Q15	7D
Q16	7D
Q17	7B
Q18	6D
Q19	5D
Q20	7B
Q25	5D
Q27	4D
Q30	4C
Q32	5D
Q40	6F
Q43	5F
Q44	6F
Q49	5F
Q53	6E
Q64	4D
Q66	6C
Q700	2C
Q702	2C
Q808	2D
Q809	2D
Q810	2E
Q811	2E

Refer to the schematic diagram for the values of resistors and capacitors.

SWITCH UNIT
X16-1860-00
(J74-1399-02)

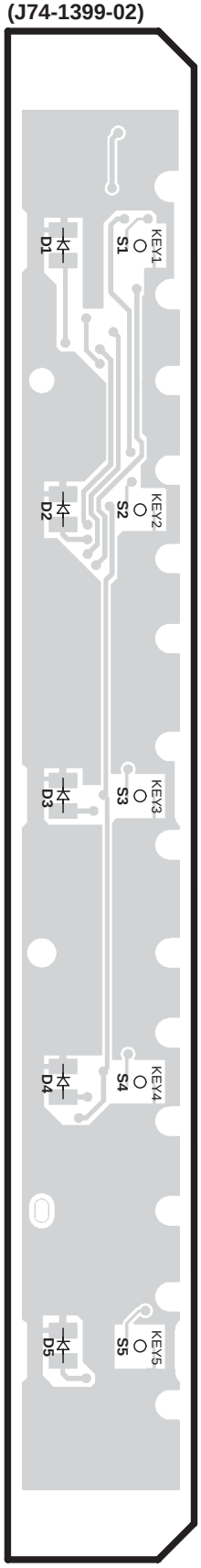

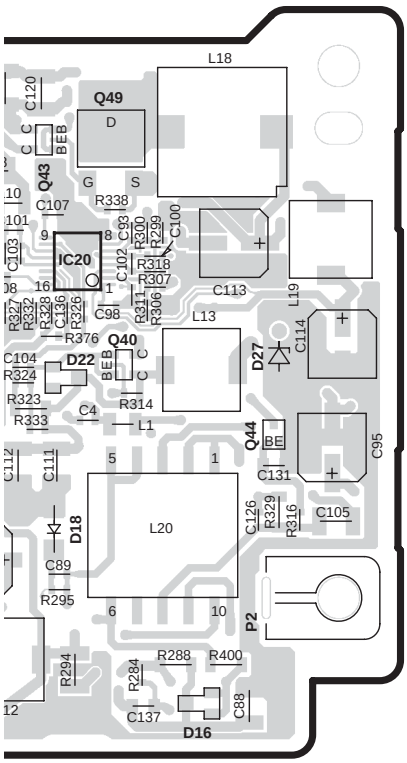

FGZ201ELF2/ERF2

PC BOARD (FOIL SIDE VIEW)

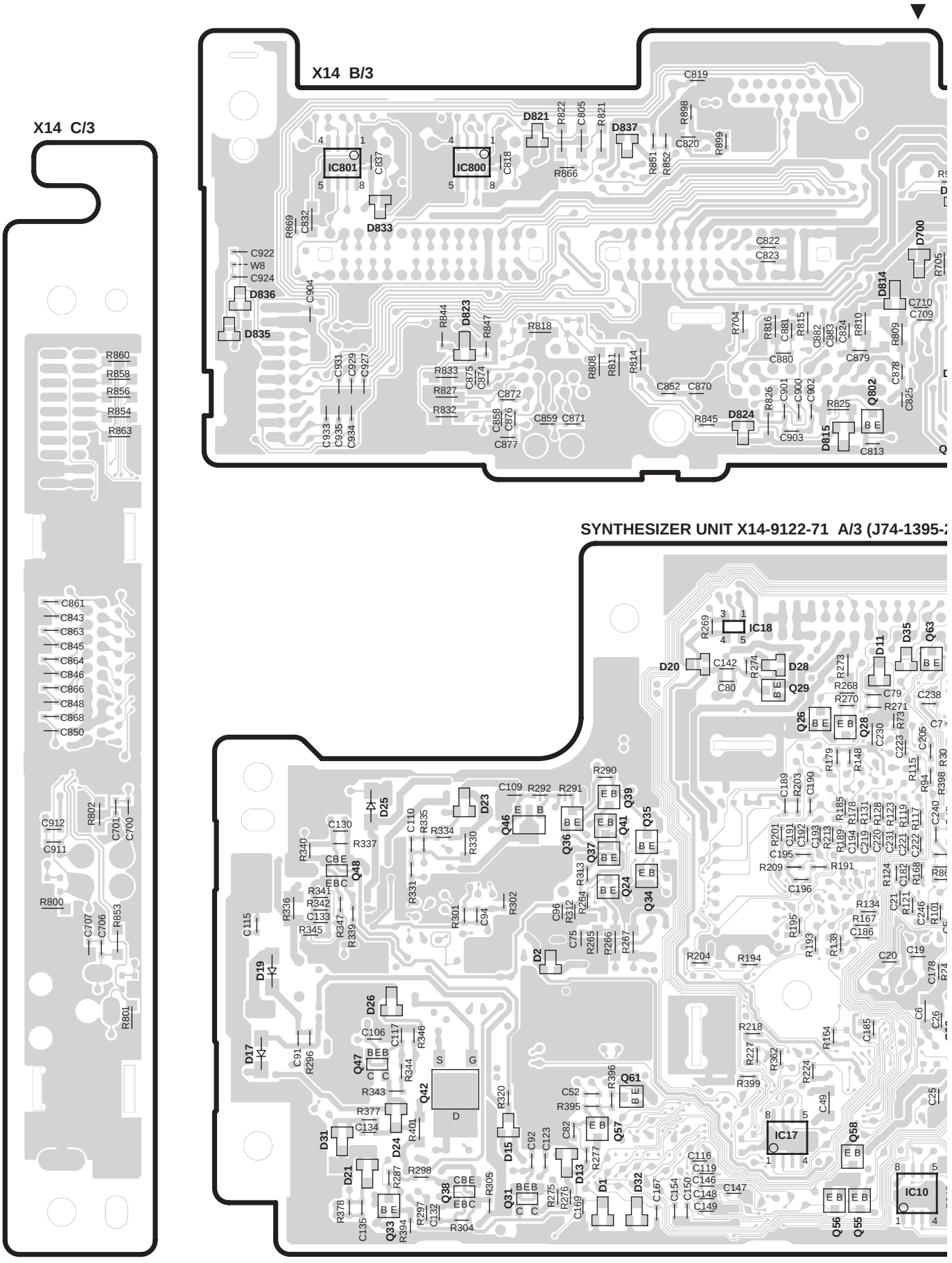

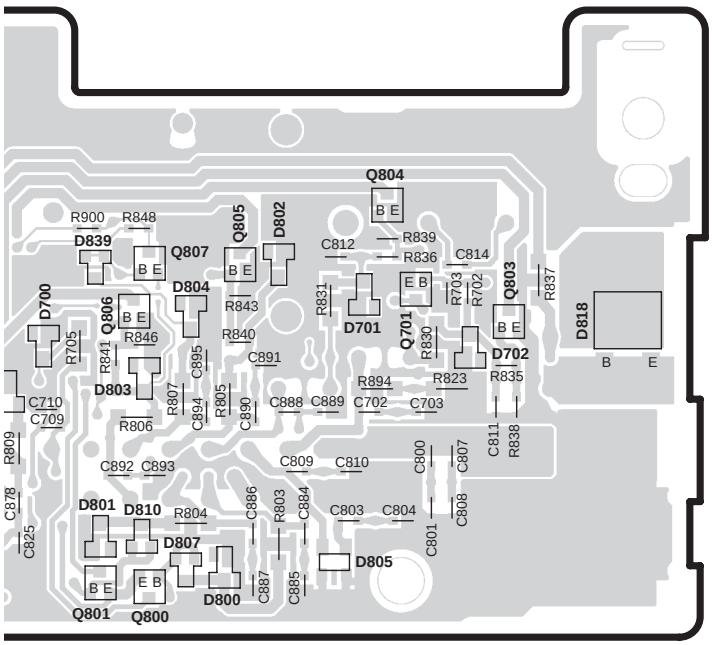

4-1395-22)

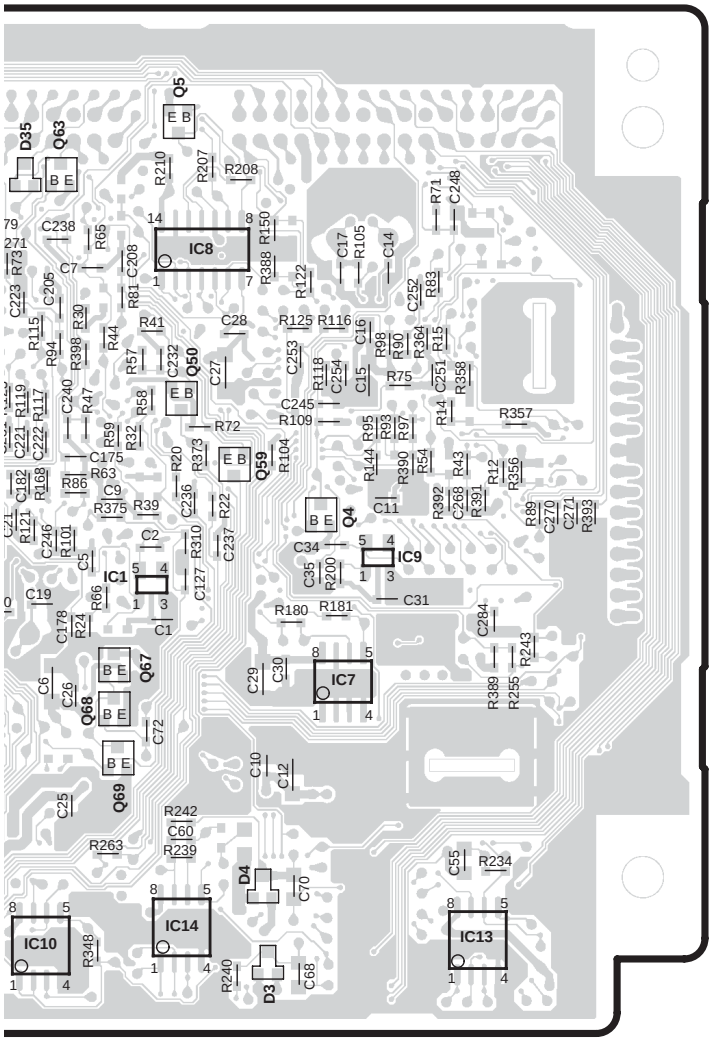

X14-9122-71

Ref No.	Address
IC1	6P
IC7	6Q
IC8	5P
IC9	6Q
IC10	7O
IC13	7Q
IC17	7O
IC18	4O
IC800	2M
Q4	5Q
Q5	4P
Q24	5N
Q26	5O
Q28	5O
Q29	4O
Q31	7M
Q33	7M
Q34	5N
Q35	5N
Q36	5N
Q37	5N
Q38	7M
Q39	5N
Q41	5N
Q42	6M
Q46	5M
Q47	6M
Q48	5M
Q50	5P
Q55	7O
Q56	7O
Q57	7N
Q58	7O
Q61	6N
Q67	6P
Q68	6P
Q69	6P
Q701	2Q
Q800	3P
Q801	3P
Q802	3O
Q803	2Q
Q804	2Q
Q805	2P
Q806	2P
Q807	2P

Refer to the schematic diagram for the values of resistors and capacitors.

SWITCH UNIT
X16-1860-00
(J74-1399-02)

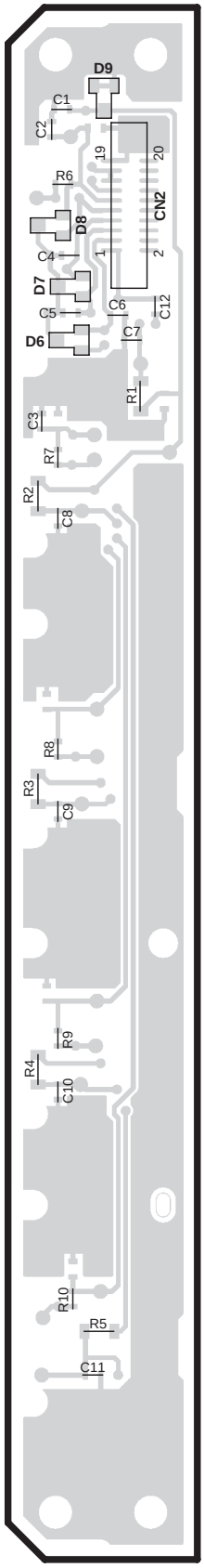

FGZ201ELF2/ERF2

PC BOARD (COMPONENT SIDE VIEW)

VIDEO UNIT X35-4250-00 (J74-1394-12)

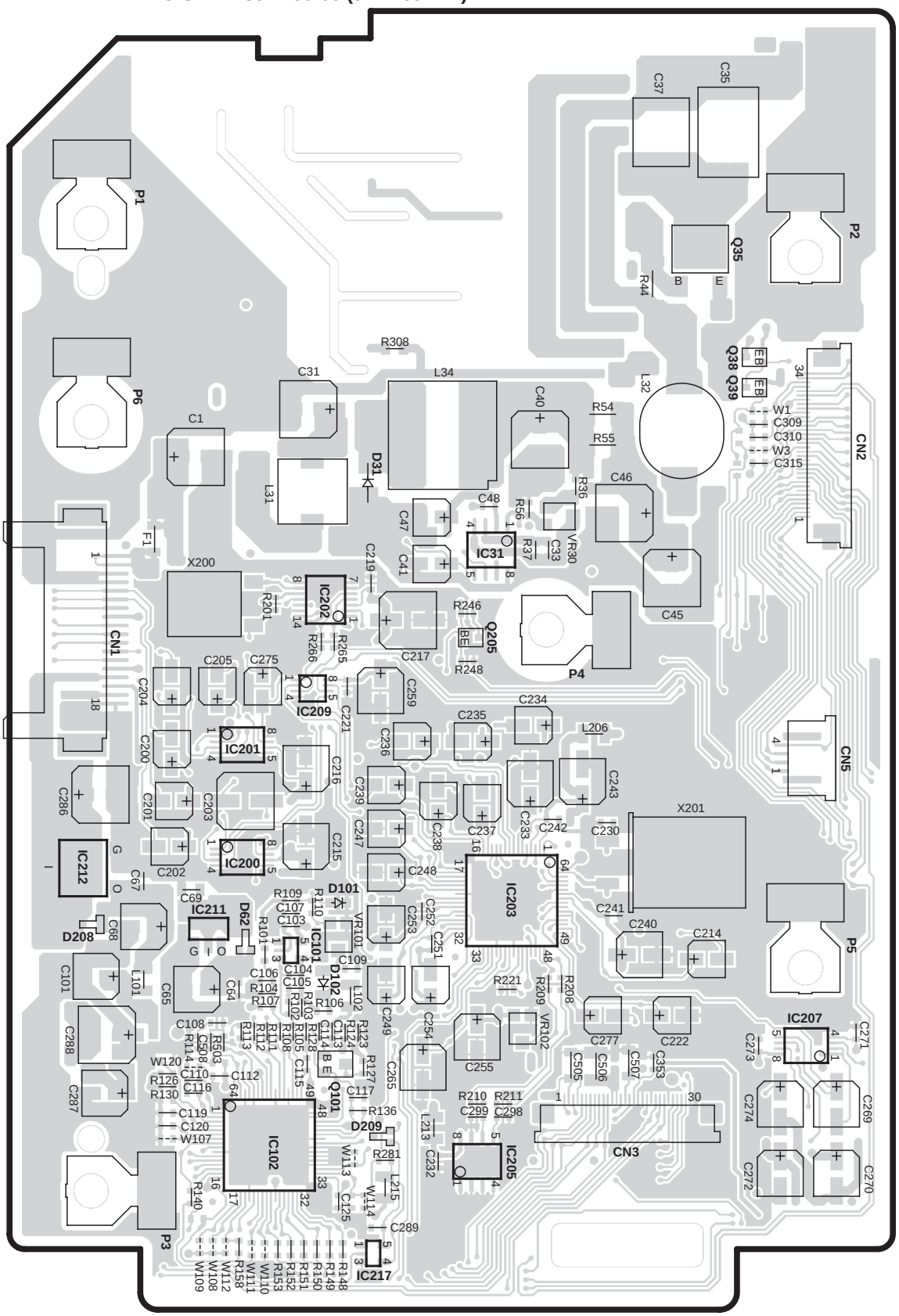

X35-4250-00

Ref No.	Address
IC31	4W
IC101	5V
IC102	6V
IC200	5V
IC201	5V
IC202	4V
IC203	5W
IC205	6W
IC207	6X
IC209	4V
IC211	5V
IC212	5U
IC217	7V
Q35	2X
Q38	3X
Q39	3X
Q101	6V
Q205	4W

Refer to the schematic diagram for the values of resistors and capacitors.

PC BOARD (FOIL SIDE VIEW)

VIDEO UNIT X35-4250-00 (J74-1394-12)

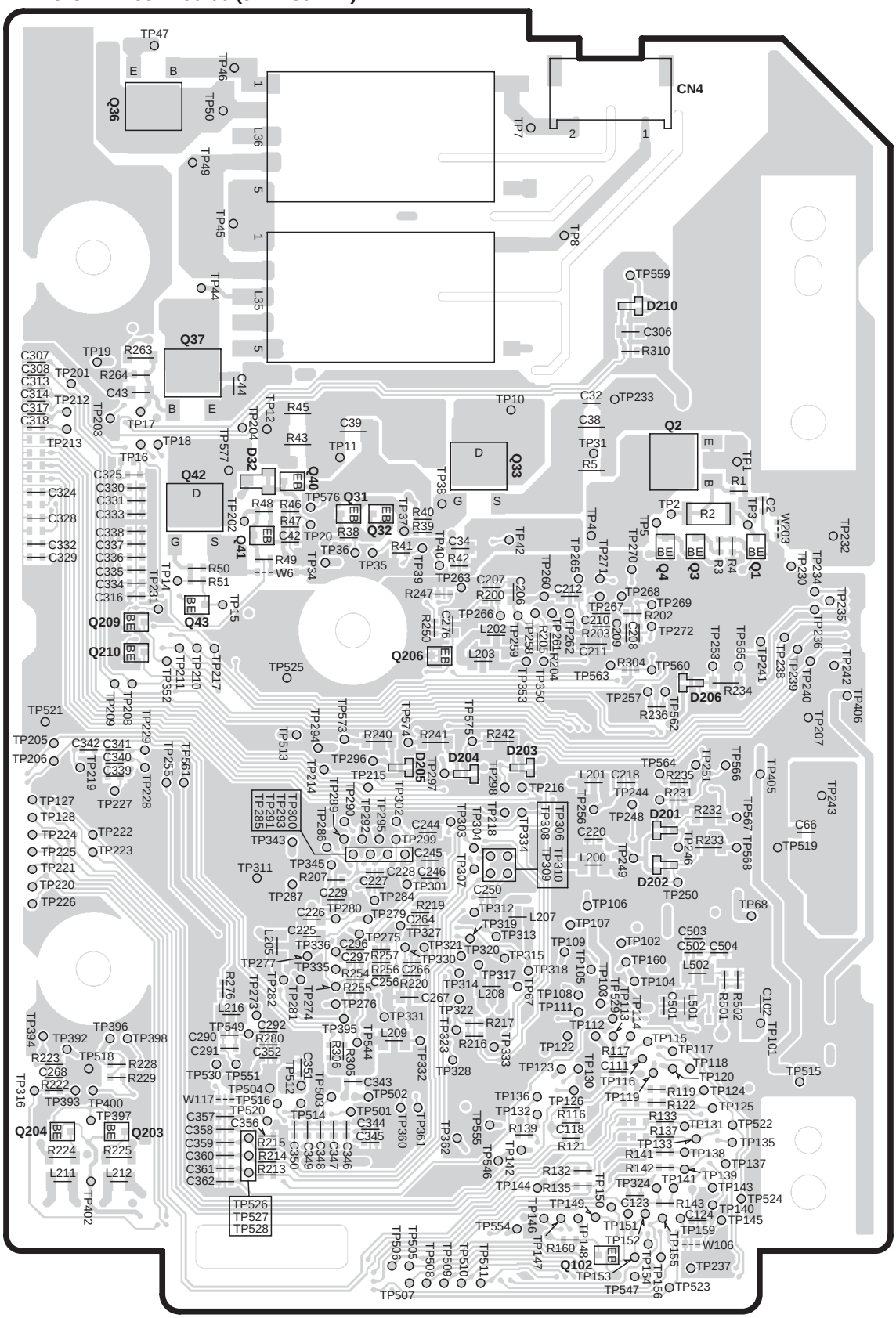

X35-4250-00

Ref No.	Address
Q1	4AC
Q2	3AB
Q3	4AC
Q4	4AB
Q31	3AA
Q32	4AA
Q33	3AB
Q36	2Z
Q37	3Z
Q40	3AA
Q41	4AA
Q42	3Z
Q43	4Z
Q102	7AB
Q203	6Z
Q204	6Z
Q206	4AA
Q209	4Z
Q210	4Z

Refer to the schematic diagram for the values of resistors and capacitors.

FGZ201ELF2/ERF2

PC BOARD (COMPONENT SIDE VIEW)

ELECTRIC UNIT X25-9412-71 (J74-1396-12)

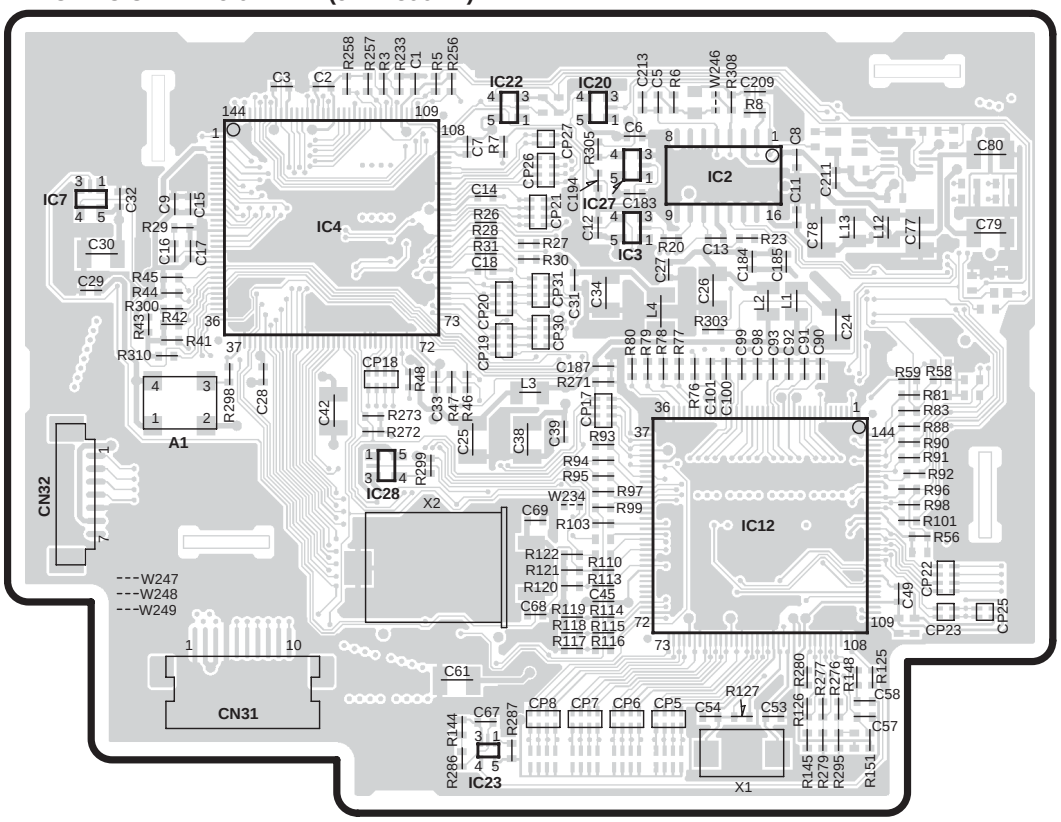

X25-9412-71

Ref No.	Address
IC2	2AG
IC3	2AG
IC4	2AF
IC7	2AE
IC12	3AH
IC20	2AG
IC22	2AG
IC23	4AG
IC27	2AG
IC28	3AF

(FOIL SIDE VIEW)

ELECTRIC UNIT X25-9412-71 (J74-1396-12)

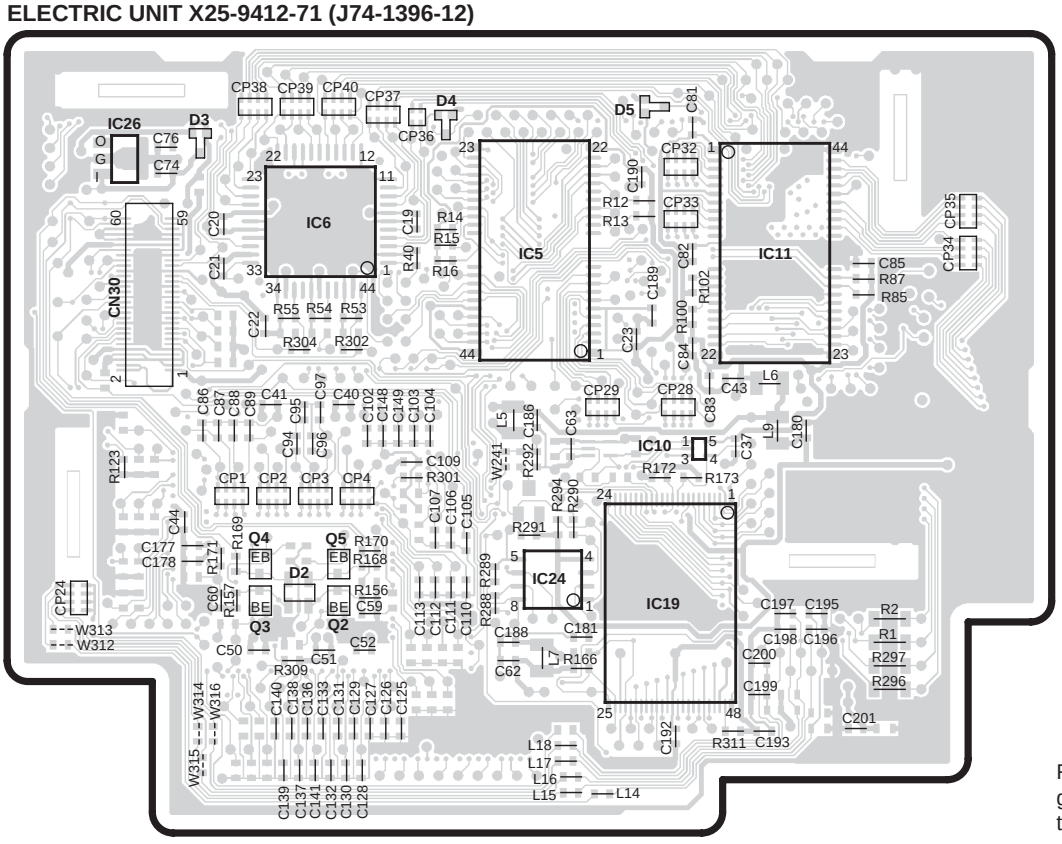

X25-9412-71

Ref No.	Address
IC5	5AG
IC6	5AF
IC10	6AG
IC11	5AH
IC19	6AG
IC24	6AG
IC26	5AE
Q2	7AF
Q3	7AF
Q4	6AF
Q5	6AF

Refer to the schematic diagram for the values of resistors and capacitors.

DTA144EUA
2SA1576A
2SD2114K

2SB1188

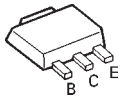

2SC2411K
2SC4081

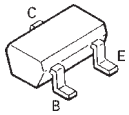

DTA124EUA
DTC124EUA
DTC144EUA

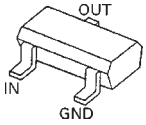

NJM4565MD

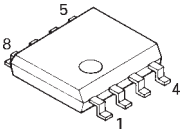

DAN202U

DAP202U
DA204U

MA143

TC7SET08FU

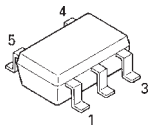

NJM4580V
TC7WHU04FU
TC7WH126FU

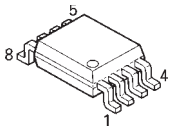

NJM2107F

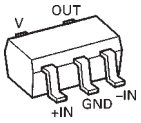

TC7SH32FU

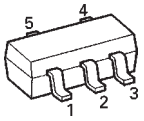

HA12187FP

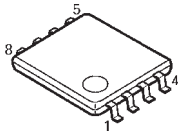

(X14-912x-xx)

MODEL NAME	UNIT No.	Ⓐ Ⓑ	C709, 710	D700	R705	W8
FGZ201F2	0-00	YES	YES	YES	YES	NO
FGZ201ADAF2	0-01	YES	YES	YES	YES	NO
FGZ201ERF2	2-71	NO	NO	NO	NO	YES
FGZ201ELF2	2-72	NO	NO	NO	NO	YES

IC800,801 : TDA8579T-T

Q700,701,803-806,
808,811 : 2SC4081
Q702,800,801,807,809
: DTA124EUA
Q802 : DTC124EUA
Q810 : 2SB1203-FA

D700-702,800-804,822,834
: MA3220-H
D805 : MAZK270D
D806,814,815,823,827-830
: MA3056WA
D807,810,824,839
: DAN202U
D811,812 : HZS6B1L
D816,819,821,831-833,
835-837 : MA143
D817 : AM01Z
D818 : DE5LC20U
D820 : U5ZA27C(TE24L)
D825 : HZS7C2L
D838 : HZM6.8FA

VIDEO LINE
AUDIO LINE
GND LINE
+B LINE
–B LINE

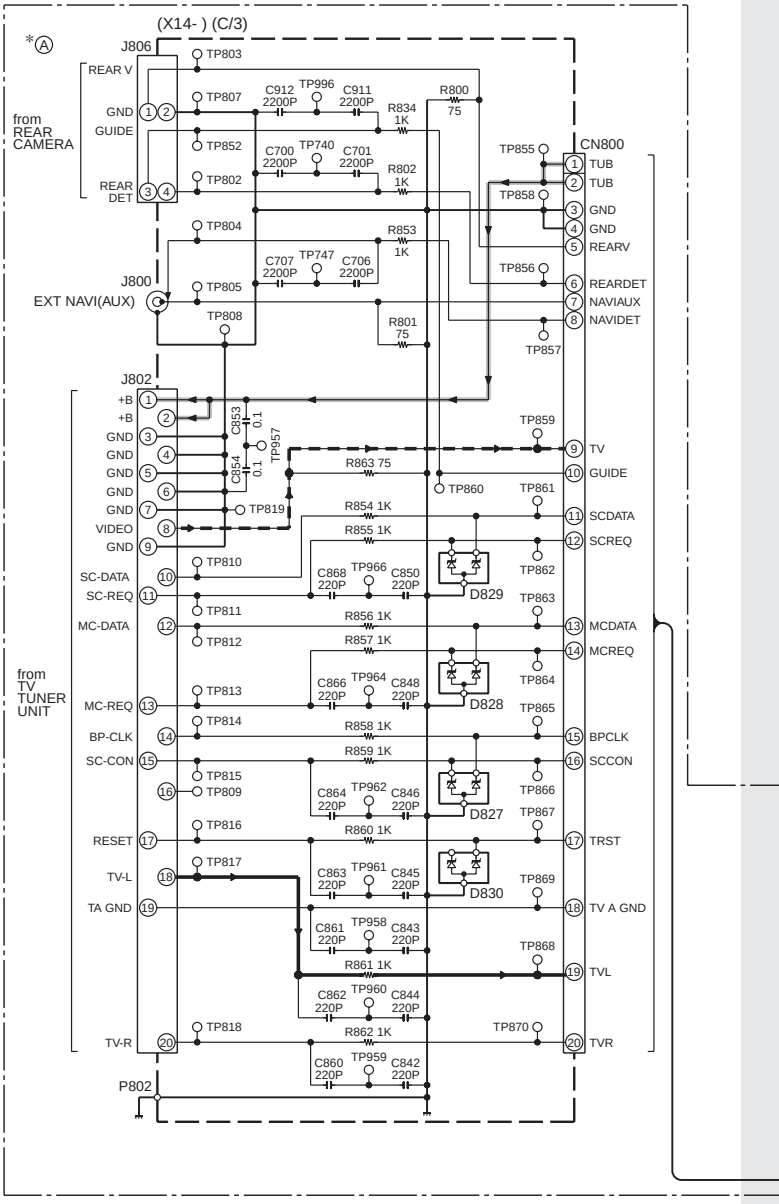

CAUTION : For continued safety, replace safety critical components only with manufacturer's recommended parts (refer to parts list).
⚠ Indicates safety critical components. To reduce the risk of electric shock, leakage-current or resistance measurements shall be carried out (exposed parts are acceptably insulated from the supply circuit) before the appliance is returned to the customer.

- DC voltages are as measured with a high impedance voltmeter. Values may vary slightly due to variations between individual instruments or/and units.

FGZ201ELF2/ERF2

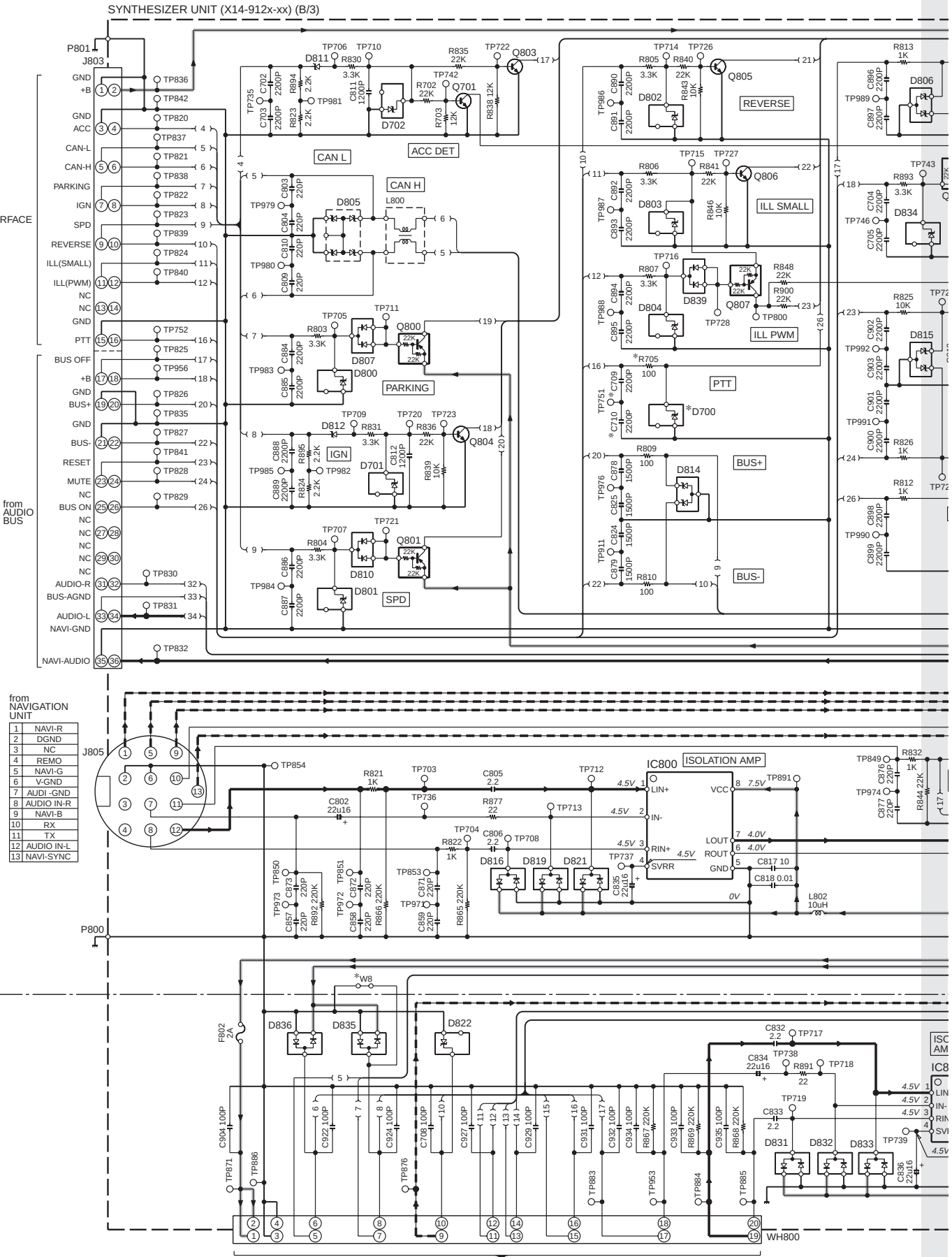

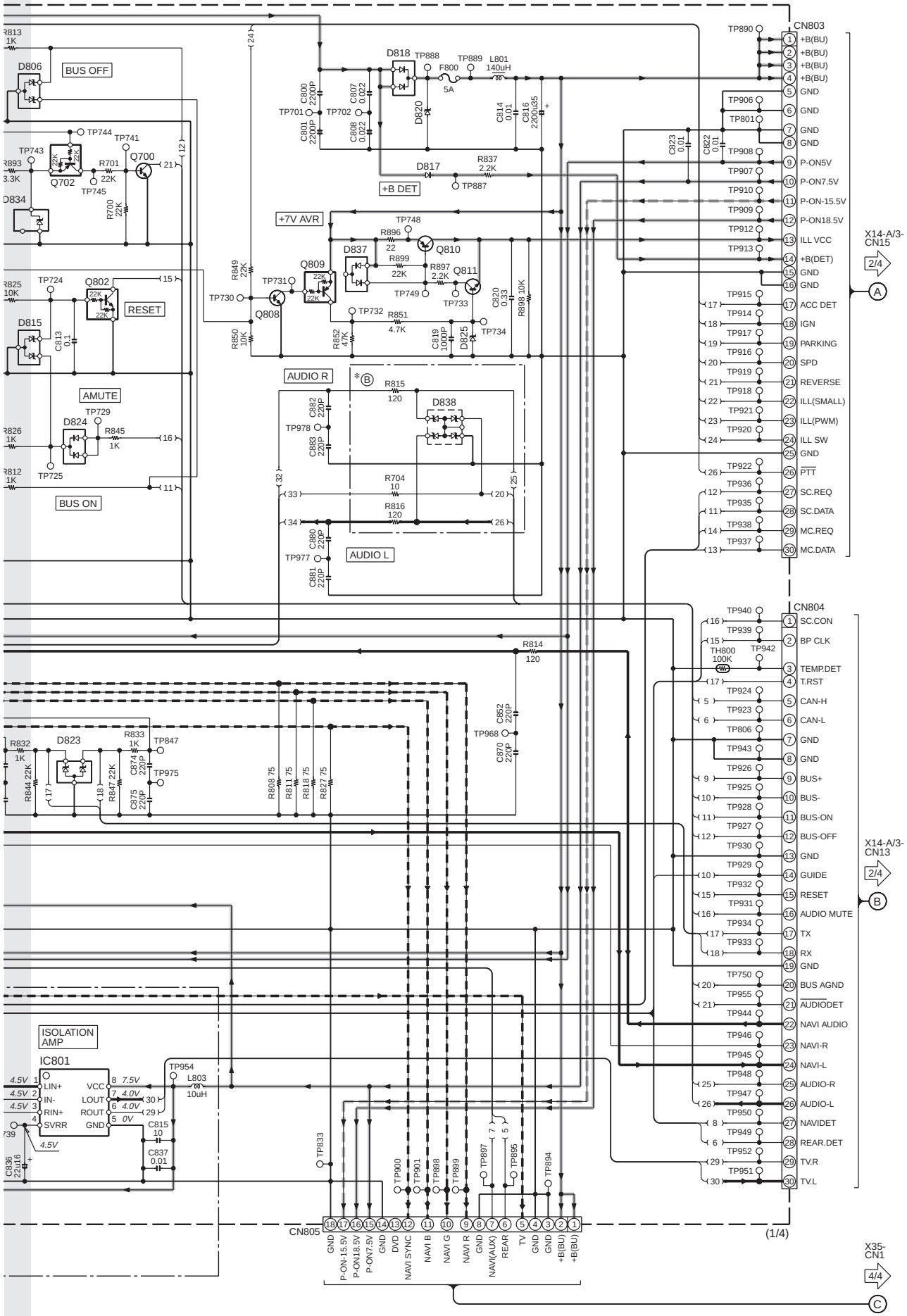
CN803
CN804
CN805
BUS OFF
BUS ON
RESET
AMUTE
+B DET
+7V AVR
AUDIO R
AUDIO L
ISOLATION AMP
IC801
X14-A/3-CN15
X14-A/3-CN13
X35-CN1
(1/4)

FGZ201ELF2/ERF2

SYNTHESIZER UNIT (X14-912x-xx) (A/3)

(X14-912x-xx) MODEL NAME	UNIT NO.	Ⓒ Ⓓ Ⓕ	Ⓔ	IC5	Q3,51,59,62,63	R11	R13 380,392	R41	R56	R264	R365
FGZ201F2	0-00	YES	NO	M30624FGAFP706	YES	YES	NO	NO	YES	NO	22K
FGZ201ADAF2	0-01	YES	YES	M30624FGAFP706	YES	YES	NO	YES	NO	NO	10K
FGZ201ERF2	2-01	NO	NO	M30624FGAFP9P3	NO	NO	YES	YES	NO	YES	20K
FGZ201ELF2	2-71	NO	NO	M30624FGAFP9P3	NO	NO	YES	NO	YES	NO	22K
FGZ201ELF2	2-72	NO	NO	M30624FGAFP9P3	NO	NO	YES	NO	YES	NO	22K

IC1,9 : S-80943CNMC
IC2 : TC7WHU04FU
IC3 : M306NBFCTFP5Q0
IC4 : MSM66P56-001
IC5 : *
IC6 : TC9260F
IC7 : S-24CS08AFJ-TB
IC8 : TJA1054
IC10,14 : NJM4565MD
IC12 : TC4066BFT(N)
IC13 : NJM2120M
IC15,16 : TC7WH126FU
IC17 : HA12187FP
IC18 : S-816A50AMC-T2
IC19 : BA00ASFP
IC20 : BA9743AFV
IC21 : S-80925CNMC

Q1,2,6,50 : DTA124EUA
Q3,15,18,36,39,41,51,59,66,67 : DTA144EUA
Q4,12,16,35,53,61,68,69 : DTC144EUA
Q5,7-11,25,26,55,56,58,62,63 : DTC124EUA
Q17 : 2SD2114K
Q19,46 : 2SB1188(Q,R)
Q20-24,29,32,37,44 : 2SC4081
Q27,30 : 2SB1203-FA
Q28,33,34,57,64 : 2SA1576A
Q31,40,43,47 : FMY6
Q38,48 : IMT1A
Q42,49 : 2SJ327Z
Q45,52,60,65 : 2SJ106(BL)

D1 : MA3056-M
D2-5,14,20 : MA143
D6,8,15,29 : DAP202U
D7,28,35 : DAN202U
D9,18,19 : 1SR154-400
D10,27 : HZS6B1L
D11,32 : MA3047-H
D12 : HZS161L
D13 : HZM20N(B)
D16,21,24,31 : 1SS184
D17,25 : EC31QS06TE12L
D22,23,26 : HZM16N(B2)
D30 : HZS11B2L

AUDIO LINE
GND LINE
+B LINE
−B LINE

CAUTION : For continued safety, replace safety critical components only with manufacturer's recommended parts (refer to parts list). ⚠ Indicates safety critical components. To reduce the risk of electric shock, leakage-current or resistance measurements shall be carried out (exposed parts are acceptably insulated from the supply circuit) before the appliance is returned to the customer.

- DC voltages are as measured with a high impedance voltmeter. Values may vary slightly due to variations between individual instruments or/and units.

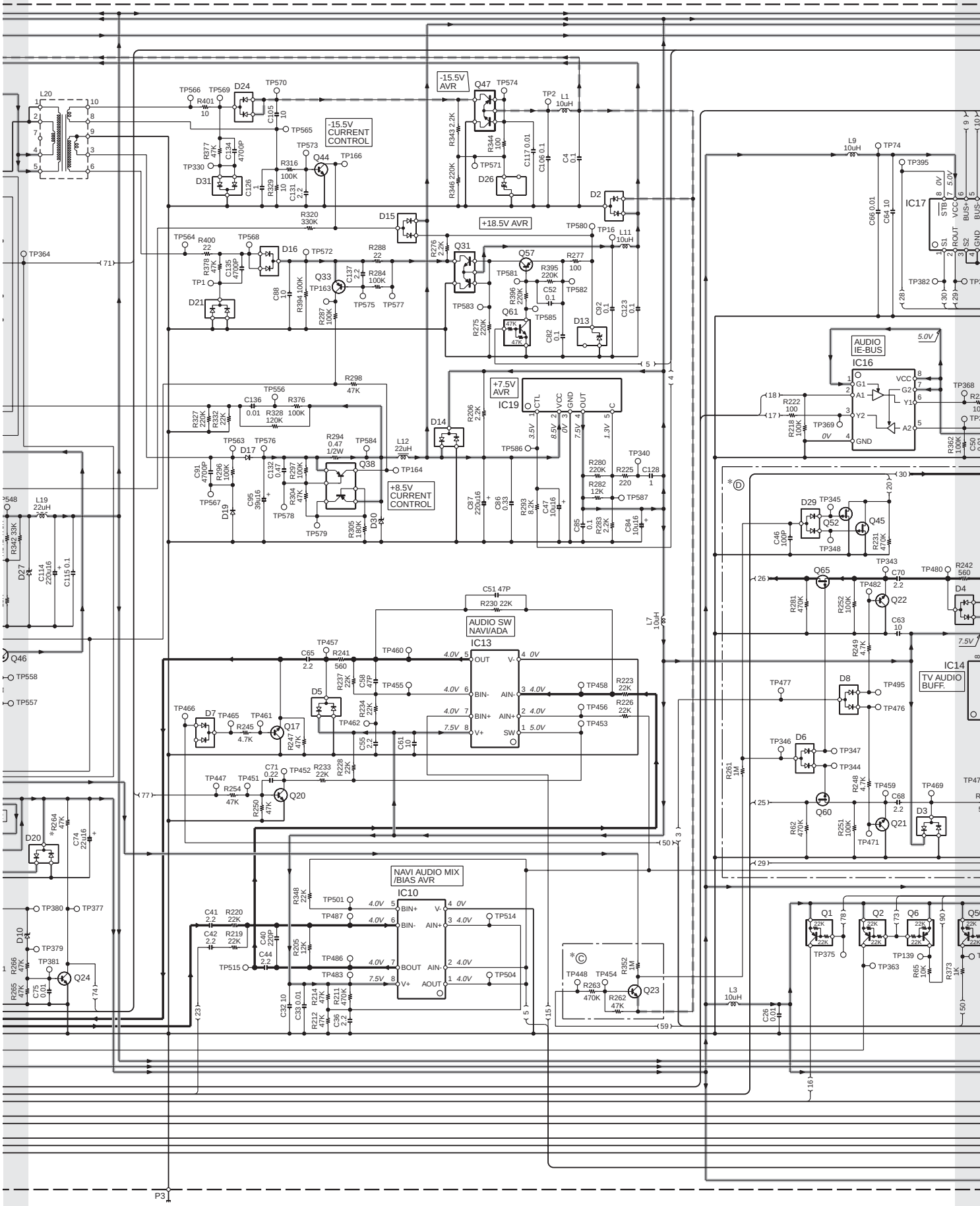
-15.5V AVR
-15.5V CURRENT CONTROL
+18.5V AVR
+7.5V AVR
+8.5V CURRENT CONTROL
AUDIO SW NAVI/ADA
IC13
NAVI AUDIO MIX /BIAS AVR
IC10
AUDIO IE-BUS
IC16
IC19
IC17
TV AUDIO BUFF.
IC14
P3

FGZ201ELF2/ERF2

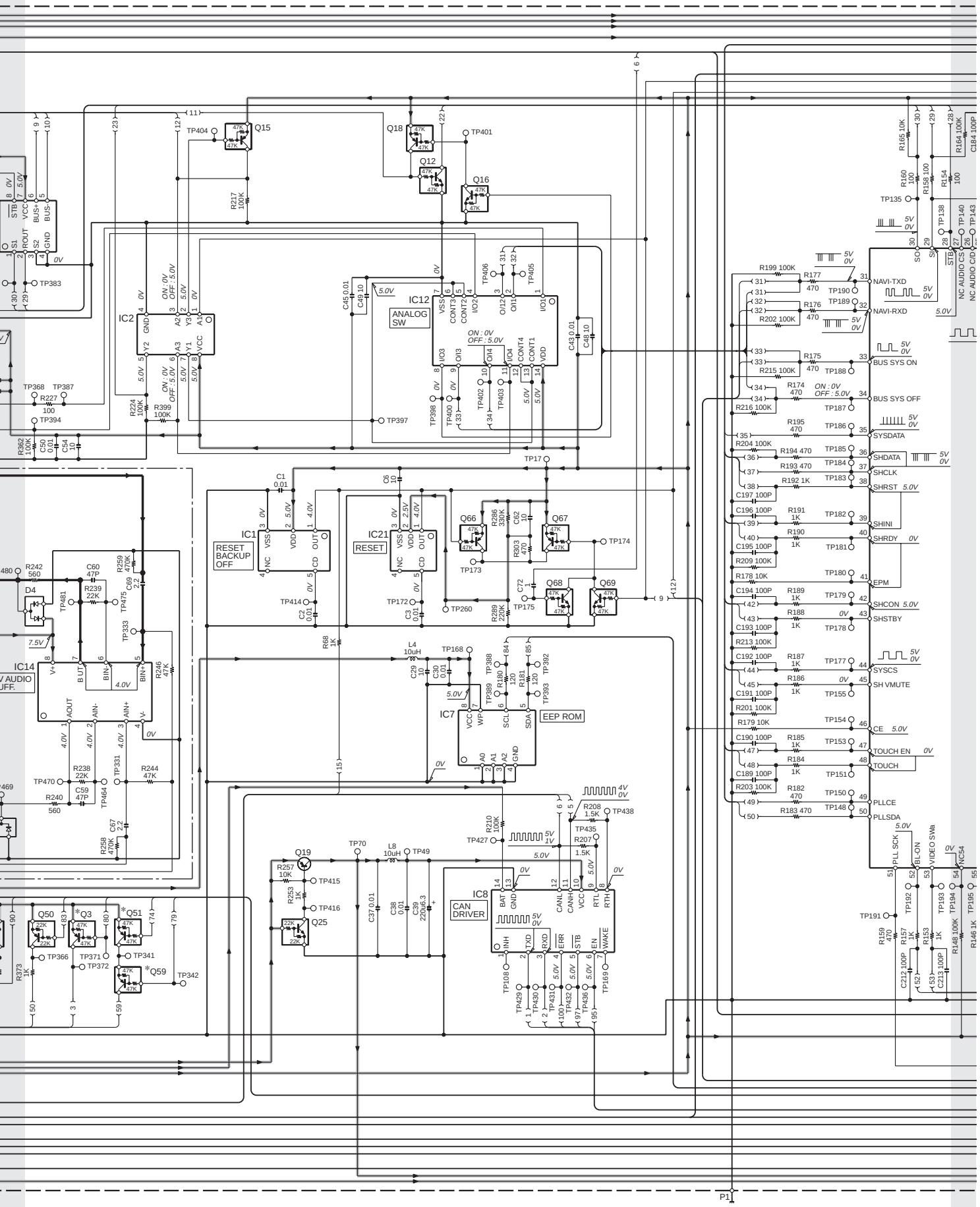

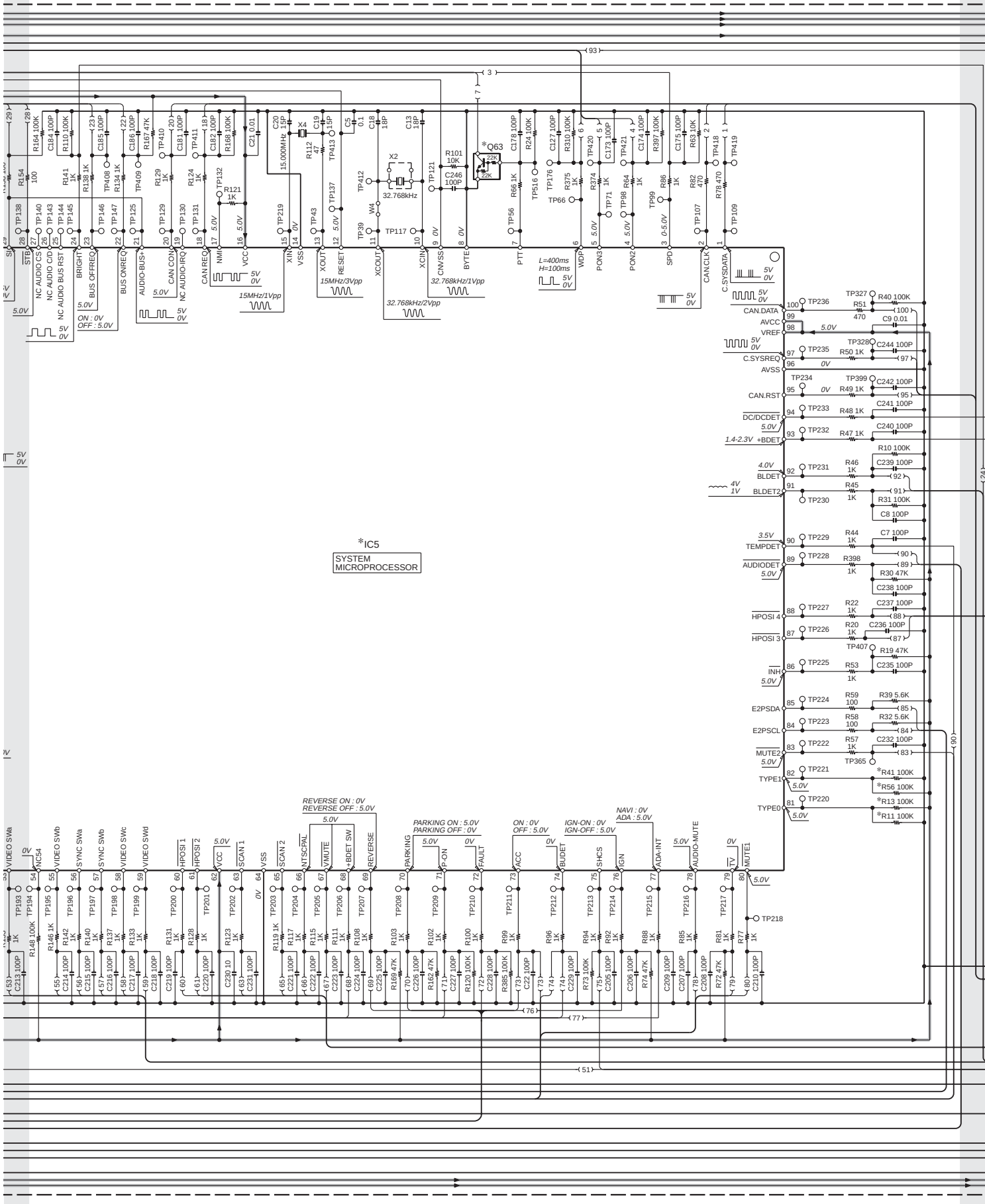
*IC5
SYSTEM
MICROPROCESSOR
X2
32.768kHz
X4
15.000MHz
*Q63
22K
22K
R101 10K
C246 100P
R121 1K
REVERSE ON : 0V
REVERSE OFF : 5.0V
PARKING ON : 5.0V
PARKING OFF : 0V
ON : 0V
OFF : 5.0V
IGN-ON : 0V
IGN-OFF : 5.0V
NAVI : 0V
ADA : 5.0V
L=400ms
H=100ms
15MHz/1Vpp
15MHz/3Vpp
32.768kHz/2Vpp
32.768kHz/1Vpp
CAN.DATA
C.SYSREQ
CAN.RST
DC/DCDET
+BDET
BLDET
BLDET2
TEMPDET
AUDIODET
HPOSI 4
HPOSI 3
INH
E2PSDA
E2PSCL
MUTE2
TYPE1
TYPE0
*R41 100K
*R56 100K
*R13 100K
*R11 100K
TP218

FGZ201ELF2/ERF2

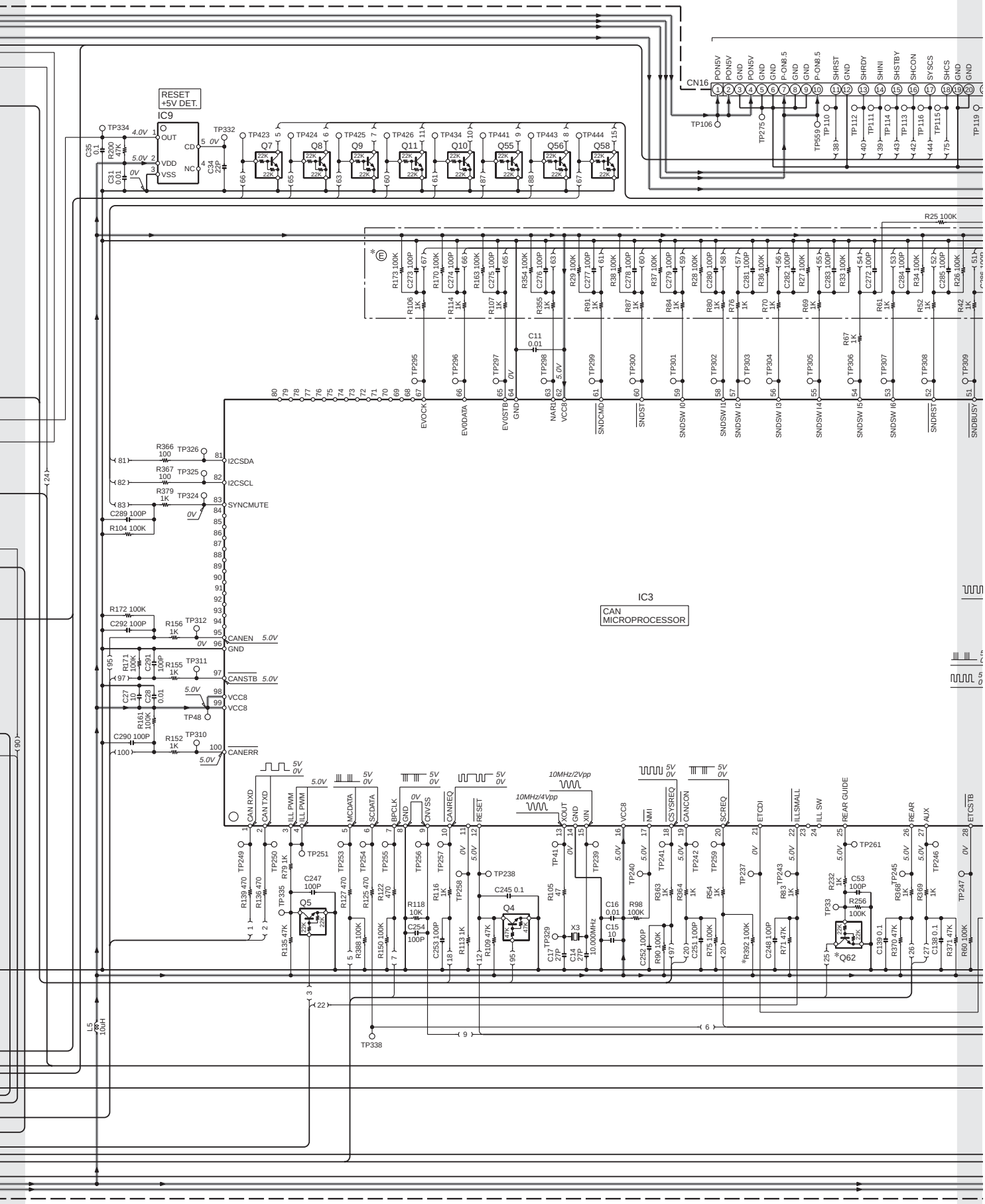

FGZ201ELF2/ERF2

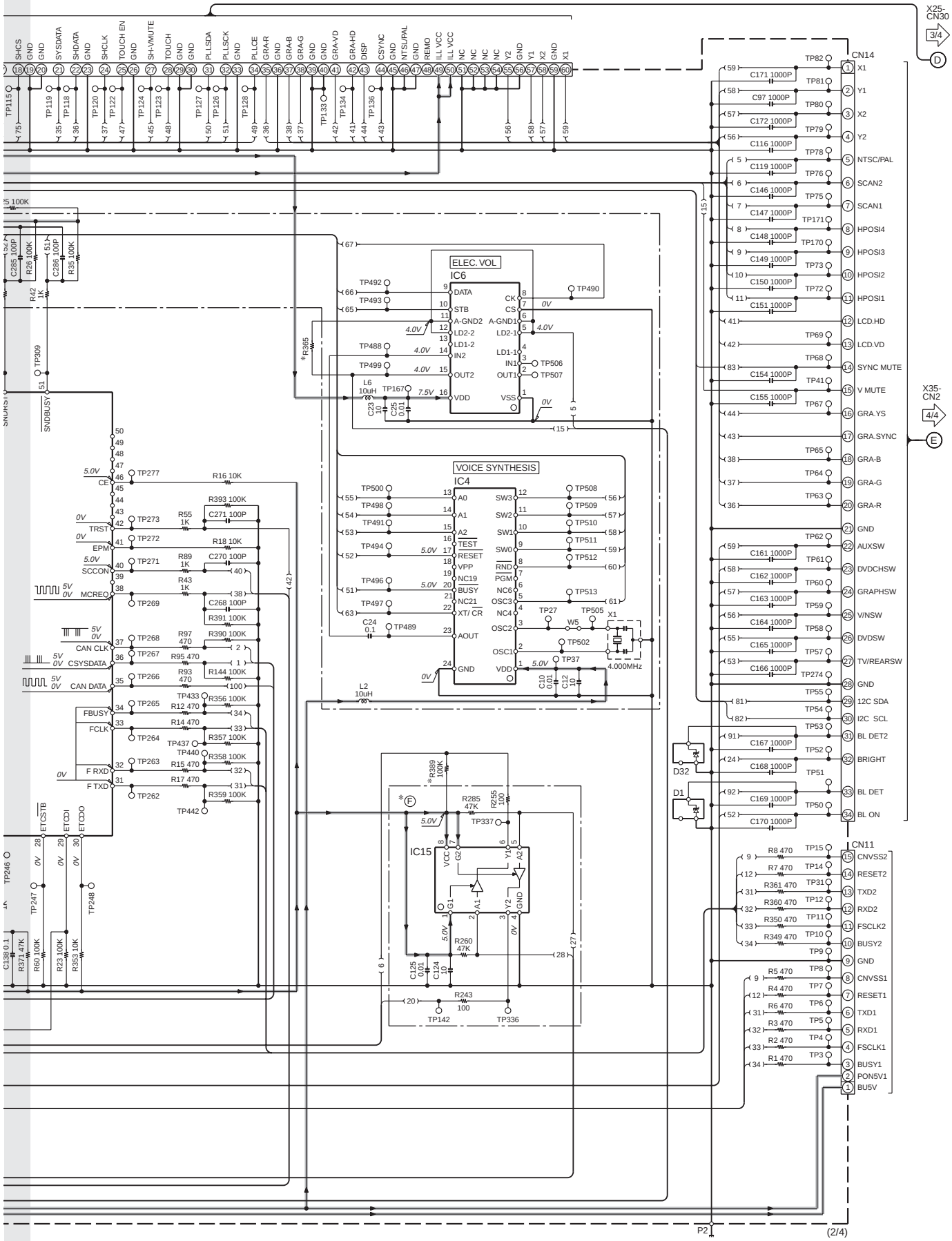

FGZ201ELF2/ERF2

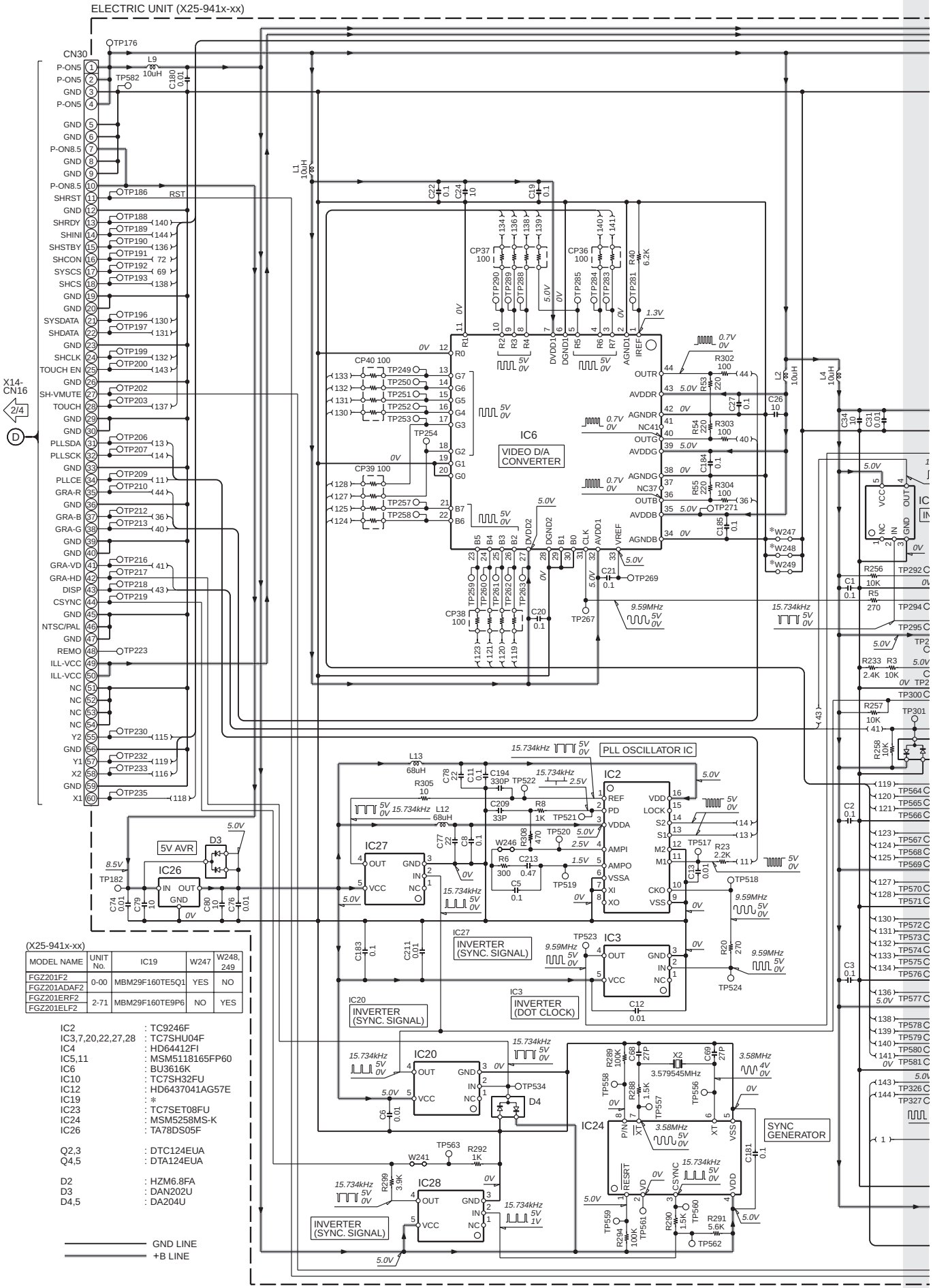

(X25-941x-xx)

MODEL NAME	UNIT No.	IC19	W247	W248, 249
FGZ201F2	0-00	MBM29F160TE5Q1	YES	NO
FGZ201ADAF2				
FGZ201ERF2	2-71	MBM29F160TE9P6	NO	YES
FGZ201ELF2				

IC2	: TC9246F
IC3,7,20,22,27,28	: TC7SHU04F
IC4	: HD64412FI
IC5,11	: MSM5118165FP60
IC6	: BU3616K
IC10	: TC7SH32FU
IC12	: HD6437041AG57E
IC19	: *
IC23	: TC7SET08FU
IC24	: MSM5258MS-K
IC26	: TA78DS05F
Q2,3	: DTC124EUA
Q4,5	: DTA124EUA
D2	: HZM6.8FA
D3	: DAN202U
D4,5	: DA204U

CAUTION : For continued safety, replace safety critical components only with manufacturer's recommended parts (refer to parts list). ⚠ Indicates safety critical components. To reduce the risk of electric shock, leakage-current or resistance measurements shall be carried out (exposed parts are acceptably insulated from the supply circuit) before the appliance is returned to the customer.

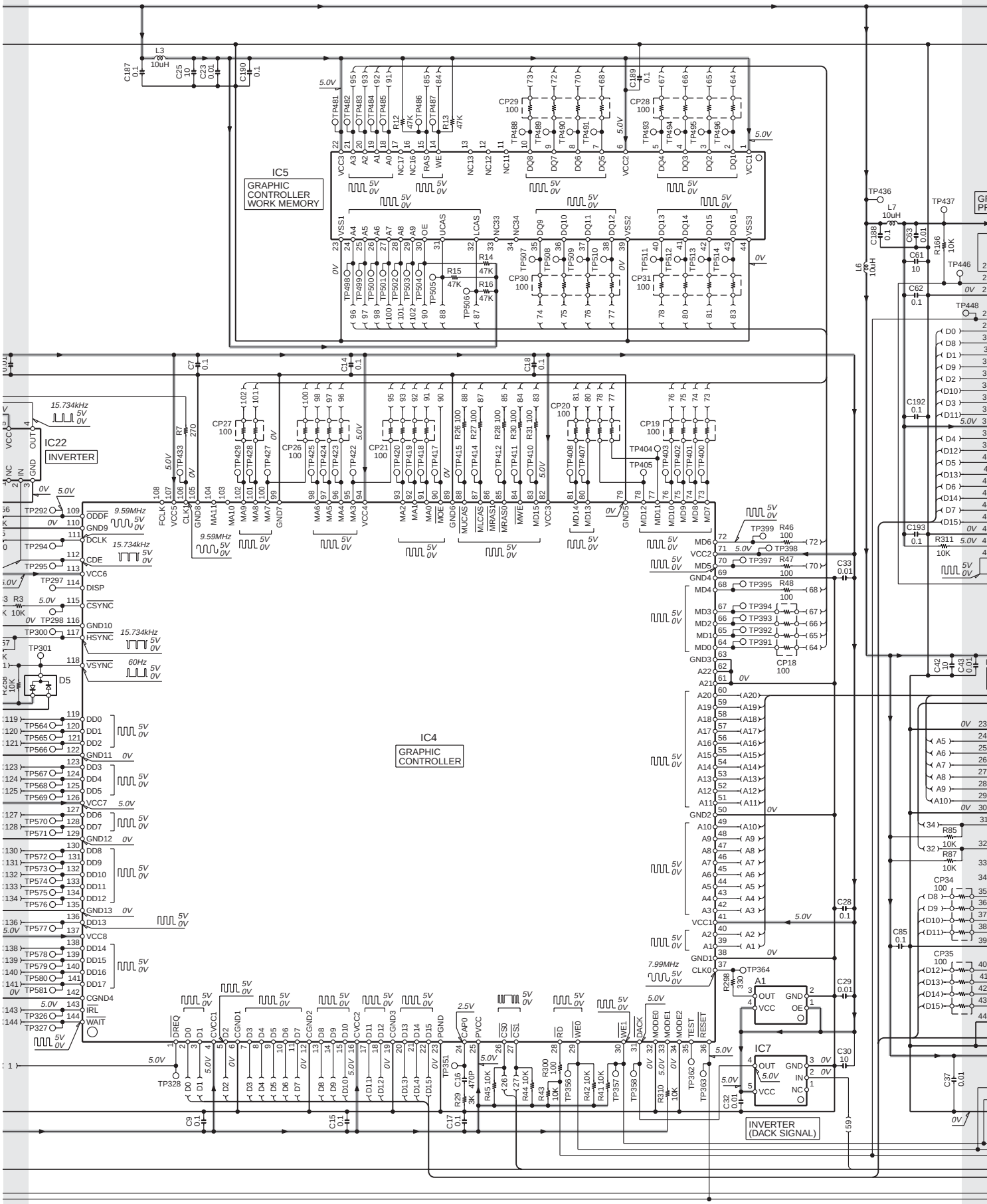

- DC voltages are as measured with a high impedance voltmeter.
  Values may vary slightly due to variations between individual instruments or/and units.

FGZ201ELF2/ERF2

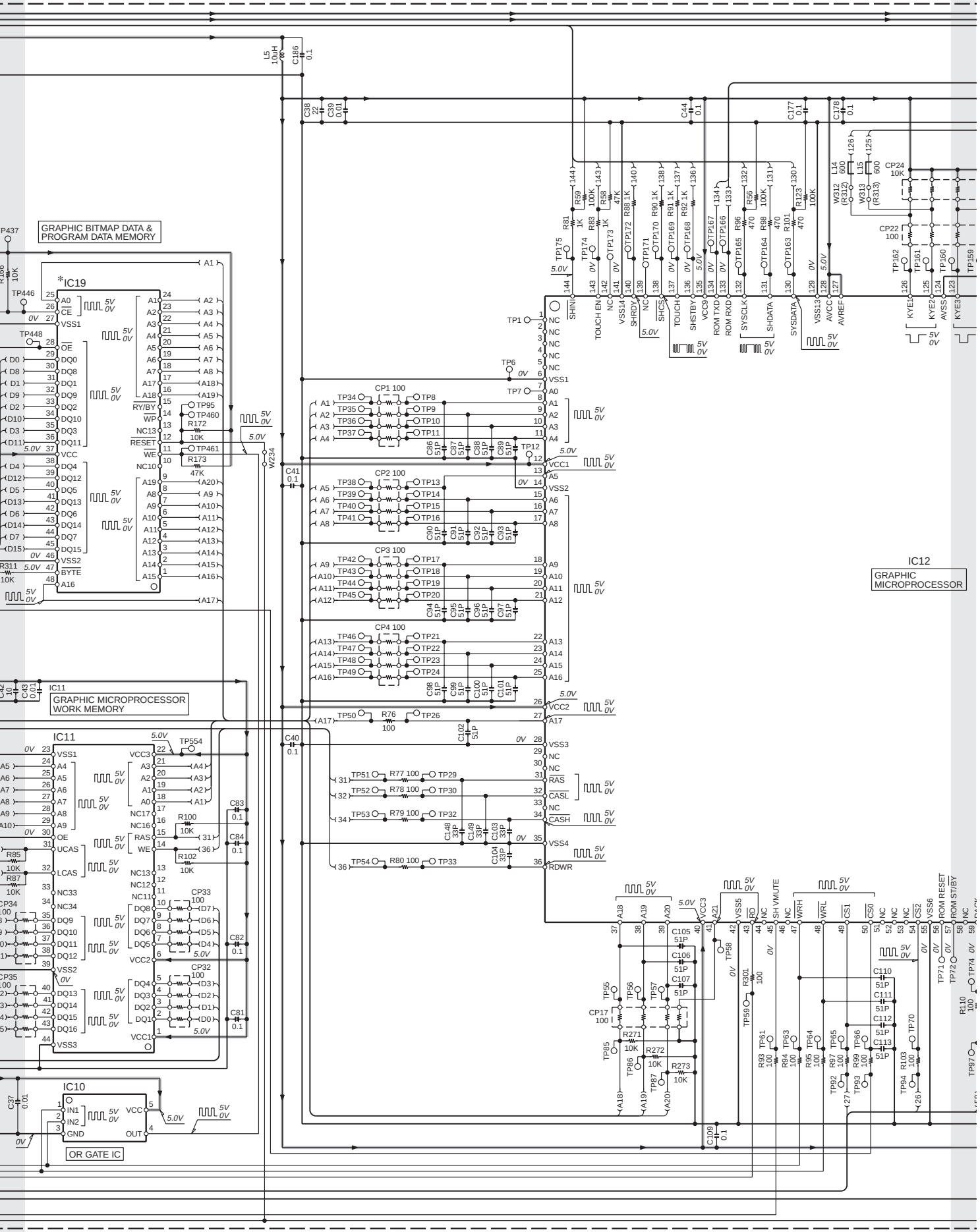

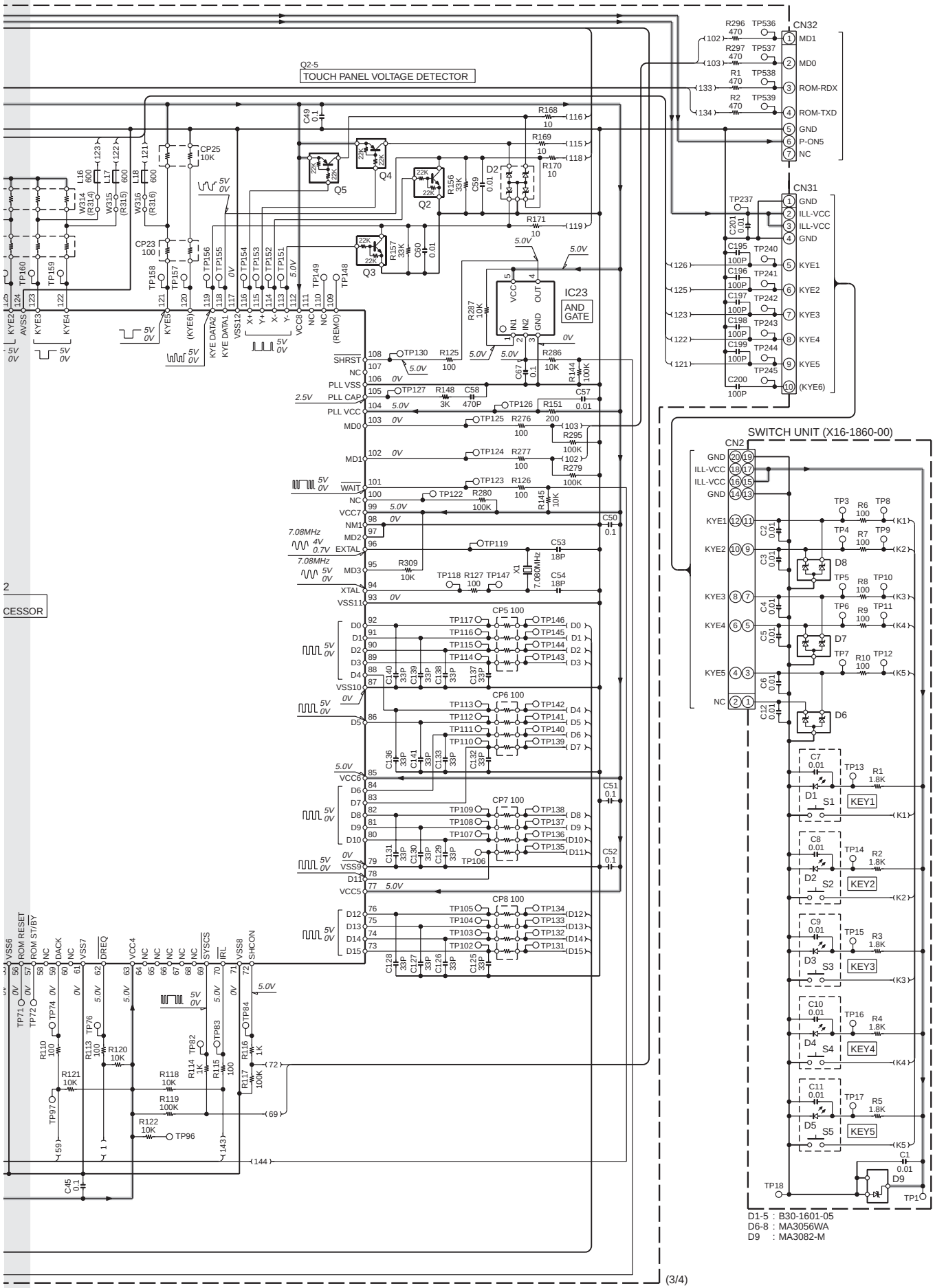
Q2-5
TOUCH PANEL VOLTAGE DETECTOR
CN32
CN31
IC23
AND GATE
SWITCH UNIT (X16-1860-00)
CN2
D1-5 : B30-1601-05
D6-8 : MA3056WA
D9 : MA3082-M
(3/4)

FGZ201ELF2/ERF2

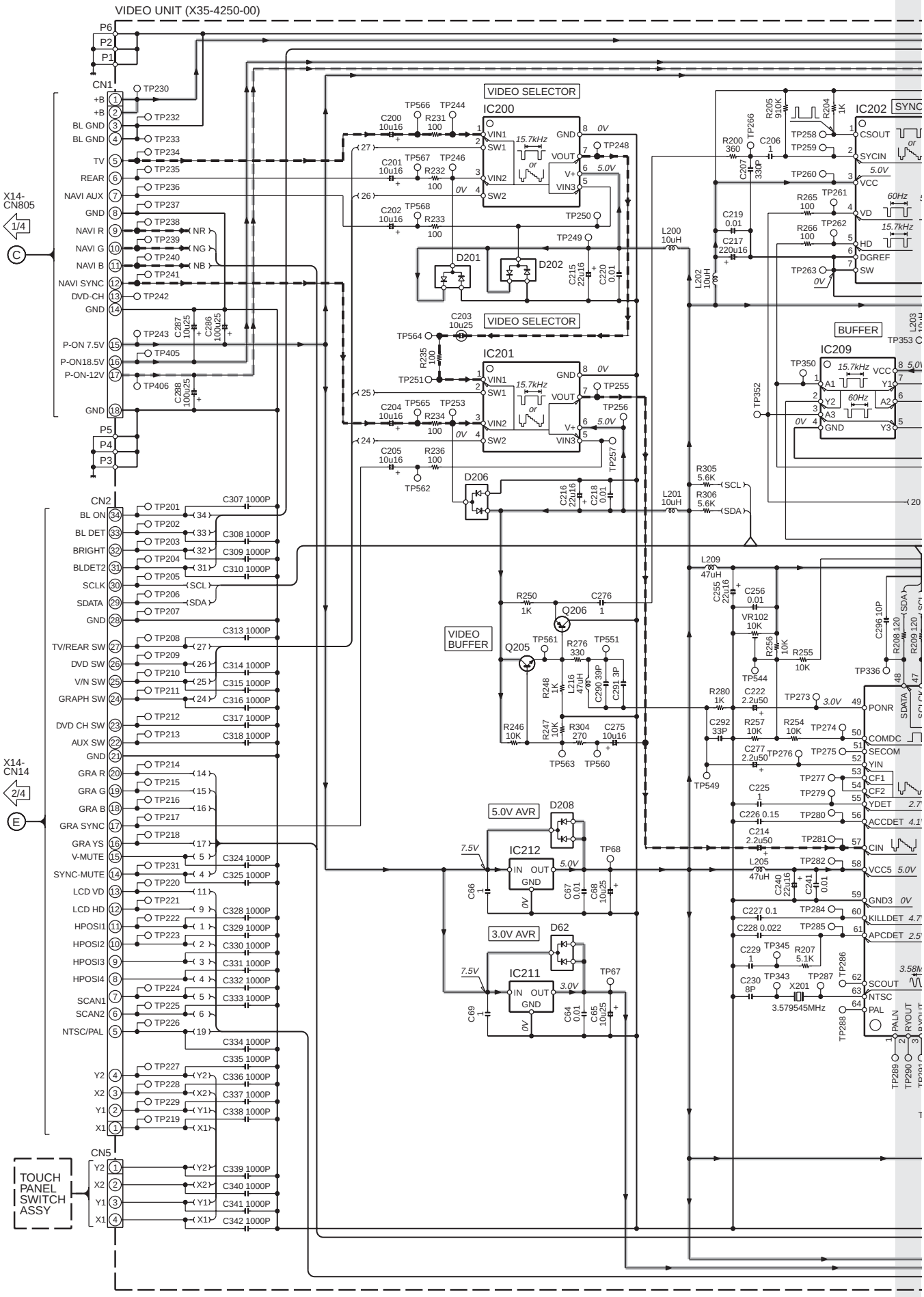

FGZ201ELF2/ERF2

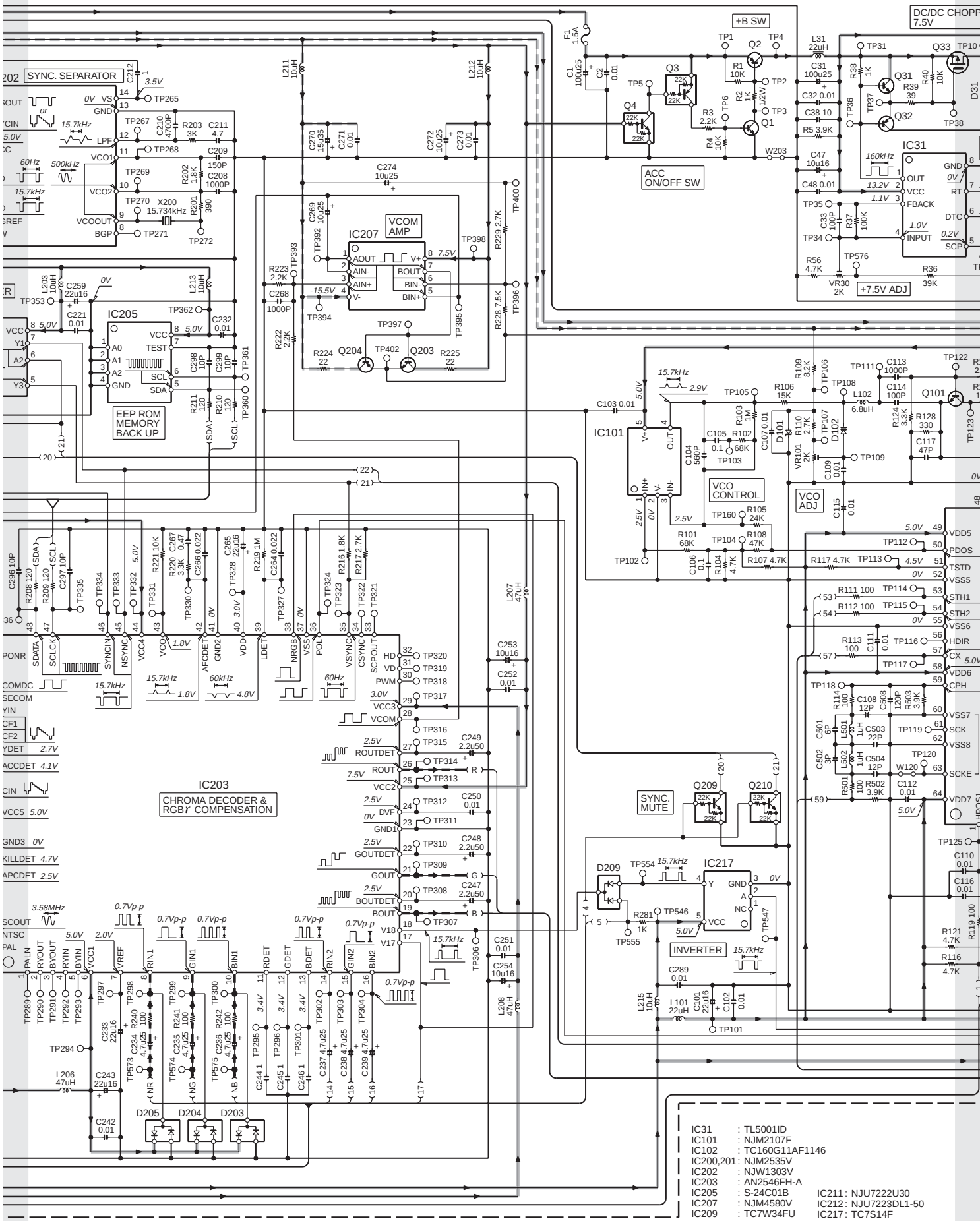

FGZ201ELF2/ERF2

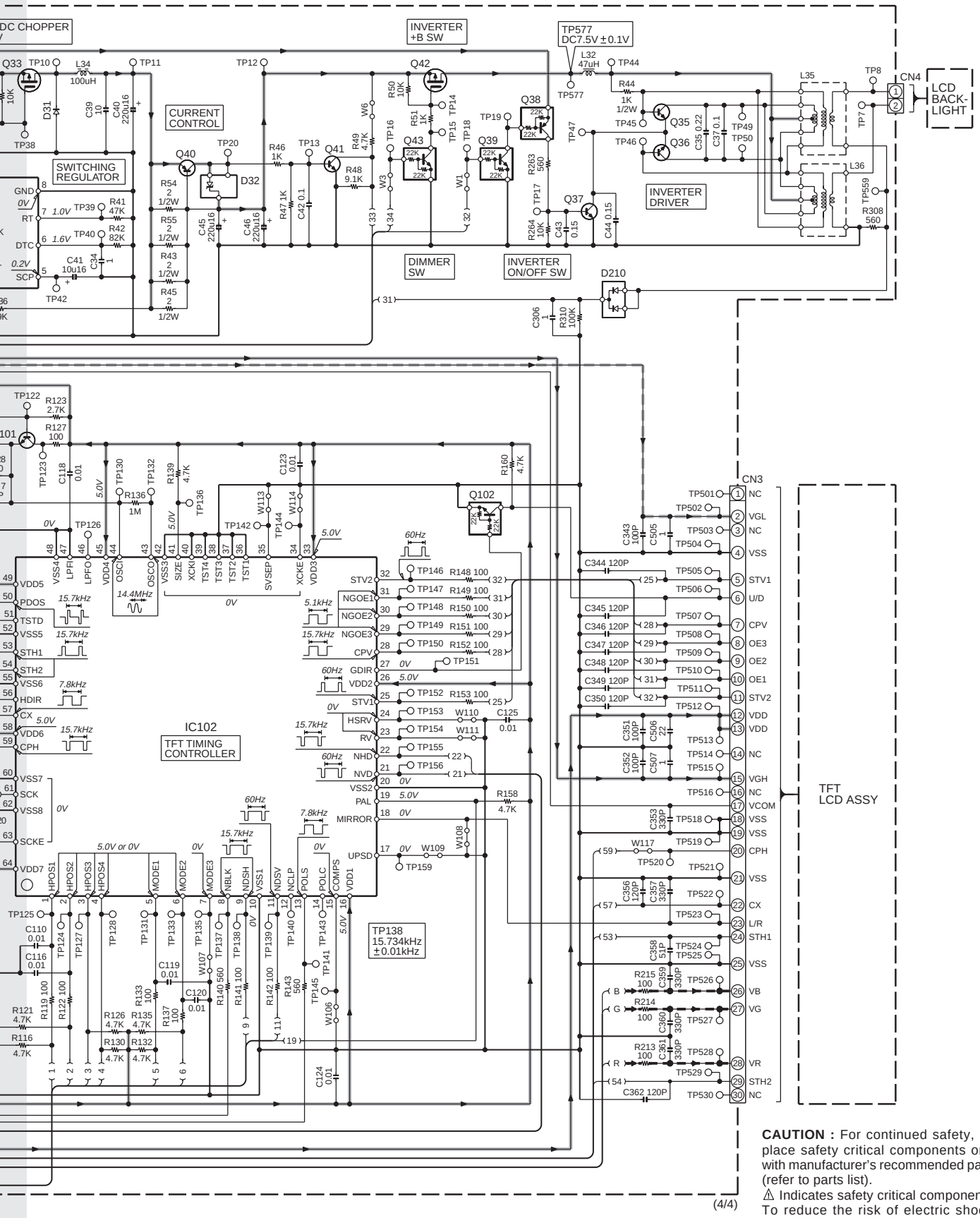

CAUTION : For continued safety, replace safety critical components only with manufacturer's recommended parts (refer to parts list).
⚠ Indicates safety critical components. To reduce the risk of electric shock, leakage-current or resistance measurements shall be carried out (exposed parts are acceptably insulated from the supply circuit) before the appliance is returned to the customer.

- DC voltages are as measured with a high impedance voltmeter. Values may vary slightly due to variations between individual instruments or/and units.

Q1,31,41,205 : 2SC4081
Q2 : 2SB1203-FA
Q3,38 : DTA124EUA
Q4,39,43,102,209,210 : DTC124EUA
Q32,40,206 : 2SA1576A
Q33,42 : 2SJ327Z
Q35-37 : 2SD1803
Q101 : 2SC2411K
Q203 : 2SC4097
Q204 : 2SA1577

D31 : RB060L-40
D32 : MA3110-M
D62,208-210 : DAN202U
D101 : MA8051-M
D102 : MA335
D201-206 : DA204U

VIDEO LINE
GND LINE
+B LINE
−B LINE

EXPLODED VIEW (UNIT)

A M2x4 : N34-2004-48
B M3x6 : N35-3006-48
C ϕ2x6 : N82-2006-48
D ϕ3x6 : N89-3006-48

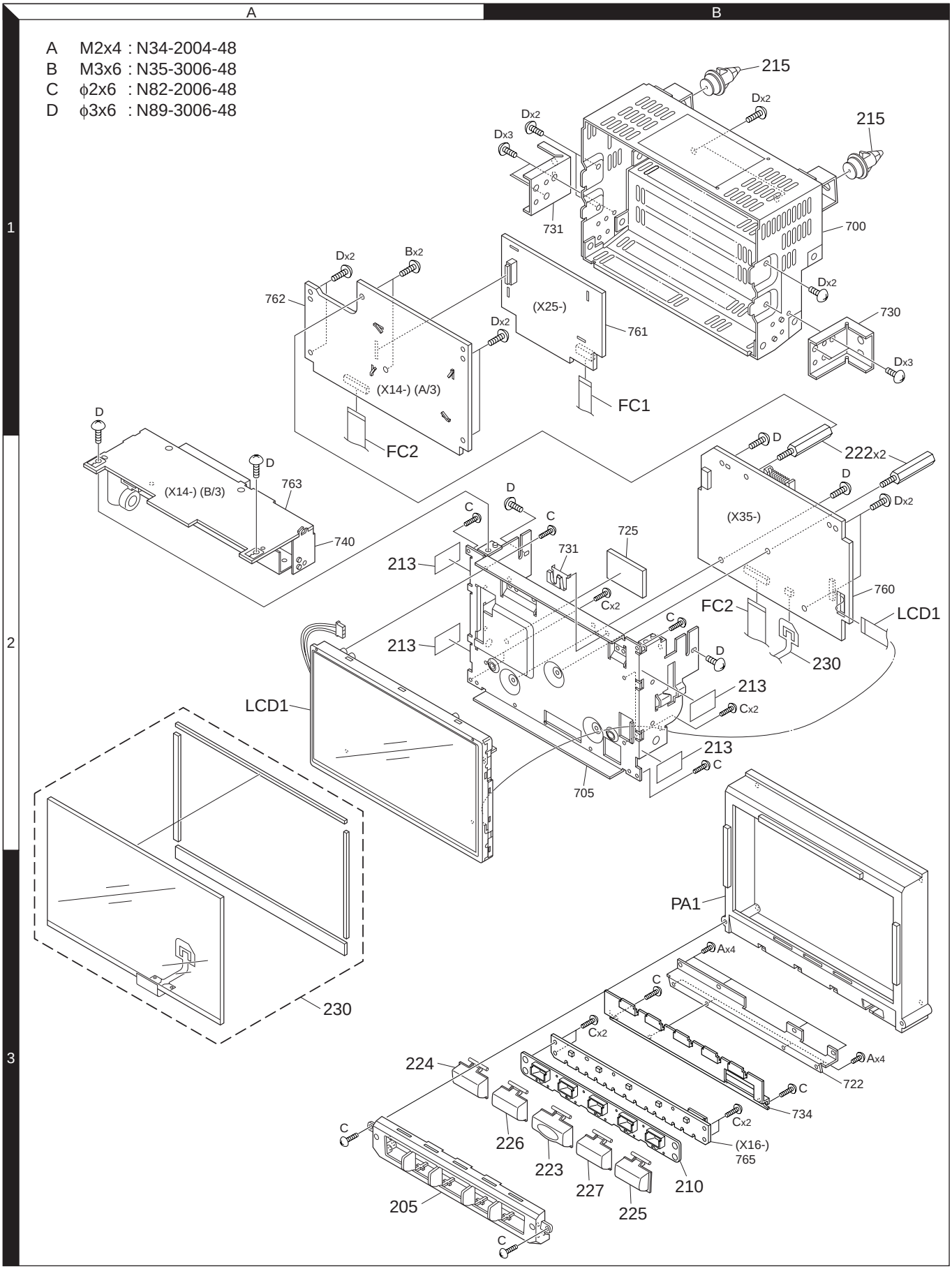

Parts with the exploded numbers larger than 700 are not supplied.

PARTS LIST

✻ New parts
Parts without **Parts No.** are not supplied.
Les articles non mentionnes dans le **Parts No.** ne sont pas fournis.
Teile ohne **Parts No.** werden nicht geliefert.

Ref. No.	Add	New	Parts No.	Description	Destination
FGZ201ELF2/ERF2					
205	3B	✻	A64-2777-12	PANEL	
PA1	3B	✻	A64-2772-21	PANEL	
LCD1	2A	✻	B38-1100-05	LIQUID CRYSTAL	
210	3B	✻	E29-1921-03	CONDUCTIVE RUBBER	
FC1	2B	✻	E39-0524-05	FLAT CABLE (10PIN)	
FC2	2B	✻	E39-0525-05	FLAT CABLE (34PIN)	
213	2B	✻	G16-1461-04	SHEET	
-		✻	H21-1155-04	PROTECTION SHEET	
215	1B	✻	J12-1235-05	PIN	
222	2B	✻	J39-0856-05	SPACER	
223	3B	✻	K24-3973-24	KNOB (NAVI)	E1
223	3B	✻	K24-4008-24	KNOB (NAVI)	E2
224	3B	✻	K24-3974-24	KNOB (IMAGE ADJ.)	E1
224	3B	✻	K24-4009-24	KNOB (IMAGE ADJ.)	E2
225	3B	✻	K24-3975-24	KNOB (CLOCK)	E1
225	3B	✻	K24-4010-24	KNOB (CLOCK)	E2
226	3B	✻	K24-3971-24	KNOB (MENU)	E1
226	3B	✻	K24-4011-24	KNOB (MENU)	E2
227	3B	✻	K24-3972-24	KNOB (INFO.)	E1
227	3B	✻	K24-4012-24	KNOB (INFO.)	E2
A	3B	✻	N34-2004-48	TRUSS HEAD MACHIN SCREW	
B	1A	✻	N35-3006-48	BINDING HEAD MACHINE SCREW	
C	3B		N82-2006-48	BINDING HEAD TAPTITE SCREW	
D	1B		N89-3006-48	BINDING HEAD TAPTITE SCREW	
230	3A	✻	S79-0822-05	SWITCH ASSY	
SYNTHESIZER UNIT (X14-9122-71)					
C1-3			CK73GB1H103K	CHIP C 0.010UF K	
C4,5			CK73GB1H104K	CHIP C 0.10UF K	
C6			CK73EB0J106K	CHIP C 10UF K	
C7,8			CC73GCH1H101J	CHIP C 100PF J	
C9			CK73GB1H103K	CHIP C 0.010UF K	
C11			CK73GB1H103K	CHIP C 0.010UF K	
C13			CC73GCH1H180J	CHIP C 18PF J	
C14			CC73GCH1H270J	CHIP C 27PF J	
C15			CK73EB0J106K	CHIP C 10UF K	
C16			CK73GB1H103K	CHIP C 0.010UF K	
C17			CC73GCH1H270J	CHIP C 27PF J	
C18			CC73GCH1H180J	CHIP C 18PF J	
C19,20			CC73GCH1H150J	CHIP C 15PF J	
C21			CK73GB1H103K	CHIP C 0.010UF K	
C22			CC73GCH1H101J	CHIP C 100PF J	
C26			CK73GB1H103K	CHIP C 0.010UF K	
C27			CK73EB0J106K	CHIP C 10UF K	
C28			CK73GB1H103K	CHIP C 0.010UF K	
C29			CK73EB0J106K	CHIP C 10UF K	
C30,31			CK73GB1H103K	CHIP C 0.010UF K	
C32			CK73DF1C106Z	CHIP C 10UF Z	
C33			CK73GB1H103K	CHIP C 0.010UF K	
C34			CC73GCH1H220J	CHIP C 22PF J	

Ref. No.	Add	New	Parts No.	Description	Destination
C35			CK73GB1H104K	CHIP C 0.10UF K	
C36			CK73FB1A225K	CHIP C 2.2UF K	
C37,38			CK73GB1H103K	CHIP C 0.010UF K	
C39			C92-1429-05	ELECTRO 220UF 6.3WV	
C40			CC73GCH1H221J	CHIP C 220PF J	
C41,42			CK73FB1A225K	CHIP C 2.2UF K	
C43			CK73GB1H103K	CHIP C 0.010UF K	
C44			CK73FB1A225K	CHIP C 2.2UF K	
C45			CK73GB1H103K	CHIP C 0.010UF K	
C47			C92-0671-05	ELECTRO 10UF 16WV	
C48,49			CK73EB0J106K	CHIP C 10UF K	
C50			CK73GB1H103K	CHIP C 0.010UF K	
C51			CC73GCH1H470J	CHIP C 47PF J	
C52			CK73GB1H104K	CHIP C 0.10UF K	
C53			CC73GCH1H101J	CHIP C 100PF J	
C54			CK73EB0J106K	CHIP C 10UF K	
C55			CK73FB1A225K	CHIP C 2.2UF K	
C58			CC73GCH1H470J	CHIP C 47PF J	
C61			CK73DF1C106Z	CHIP C 10UF Z	
C62			CK73EB0J106K	CHIP C 10UF K	
C64			CK73EB0J106K	CHIP C 10UF K	
C65			CK73FB1A225K	CHIP C 2.2UF K	
C66			CK73GB1H103K	CHIP C 0.010UF K	
C71			CK73GB1A224K	CHIP C 0.22UF K	
C72			CK73GB0J105K	CHIP C 1.0UF K	
C73		✻	C90-5215-05	ELECTRO 470UF 16WV	
C74			C92-0672-05	ELECTRO 22UF 16WV	
C75			CK73GB1H103K	CHIP C 0.010UF K	
C77			CK73GB1H103K	CHIP C 0.010UF K	
C78			C92-0671-05	ELECTRO 10UF 16WV	
C79,80			CK73GB1H104K	CHIP C 0.10UF K	
C81			C92-1491-05	ELECTRO 47UF 35WV	
C82			CK73GB1H104K	CHIP C 0.10UF K	
C83			CK73FB1C105K	CHIP C 1.0UF K	
C84			C92-0671-05	ELECTRO 10UF 16WV	
C85			CK73GB1H104K	CHIP C 0.10UF K	
C86			CK73FB1C334K	CHIP C 0.33UF K	
C87			C92-1610-05	ELECTRO 220UF 16WV	
C88		✻	C93-1289-05	CHIP C 10UF Z	
C89			CK73GB1H104K	CHIP C 0.10UF K	
C90			C92-1491-05	ELECTRO 47UF 35WV	
C91			CK73GB1H472K	CHIP C 4700PF K	
C92			CK73GB1H104K	CHIP C 0.10UF K	
C93,94			CK73GB1A334K	CHIP C 0.33UF K	
C95			C92-1476-05	ELECTRO 39UF 16WV	
C96			CK73GB1H104K	CHIP C 0.10UF K	
C97			CK73GB1H102K	CHIP C 1000PF K	
C98			CK73GB1H152K	CHIP C 1500PF K	
C99			CK73GB1H102K	CHIP C 1000PF K	
C100,101			CK73GB1H103K	CHIP C 0.010UF K	
C102-104			CC73GCH1H471J	CHIP C 470PF J	
C105		✻	C93-1289-05	CHIP C 10UF Z	
C106			CK73GB1H104K	CHIP C 0.10UF K	
C107			CK73GB1H103K	CHIP C 0.010UF K	
C108		✻	C93-1289-05	CHIP C 10UF Z	

E1 : FGZ201ERF2 **E2** : FGZ201ELF2

⚠ Indicates safety critical components.

PARTS LIST

✻ New parts
Parts without **Parts No.** are not supplied.
Les articles non mentionnes dans le **Parts No.** ne sont pas fournis.
Teile ohne **Parts No.** werden nicht geliefert.

SYNTHESIZER UNIT (X14-9122-71)

Ref. No.	Add	New	Parts No.	Description			Destination
C109			CK73GB1H103K	CHIP C	0.010UF	K	
C110			CC73GCH1H471J	CHIP C	470PF	J	
C111,112		✻	C93-1289-05	CHIP C	10UF	Z	
C113			C92-1474-05	ELECTRO	56UF	10WV	
C114			C92-1610-05	ELECTRO	220UF	16WV	
C115			CK73GB1H104K	CHIP C	0.10UF	K	
C116			CK73GB1H102K	CHIP C	1000PF	K	
C117			CK73GB1H104K	CHIP C	0.10UF	K	
C118		✻	C93-1289-05	CHIP C	10UF	Z	
C119			CK73GB1H102K	CHIP C	1000PF	K	
C120		✻	C93-1289-05	CHIP C	10UF	Z	
C123			CK73GB1H104K	CHIP C	0.10UF	K	
C126			CK73GB0J105K	CHIP C	1.0UF	K	
C127			CC73GCH1H101J	CHIP C	100PF	J	
C128			CK73FB1C105K	CHIP C	1.0UF	K	
C129			CK73GB0J105K	CHIP C	1.0UF	K	
C130			CK73GB1A334K	CHIP C	0.33UF	K	
C131			CK73FB1A225K	CHIP C	2.2UF	K	
C132			CK73GB1A474K	CHIP C	0.47UF	K	
C133			CK73GB1H473K	CHIP C	0.047UF	K	
C134,135			CK73GB1H472K	CHIP C	4700PF	K	
C136			CK73GB1H103K	CHIP C	0.010UF	K	
C137			CK73FB1A225K	CHIP C	2.2UF	K	
C138,139			CK73GB1H104K	CHIP C	0.10UF	K	
C142			CK73GB1H104K	CHIP C	0.10UF	K	
C146-151			CK73GB1H102K	CHIP C	1000PF	K	
C154,155			CK73GB1H102K	CHIP C	1000PF	K	
C161-172			CK73GB1H102K	CHIP C	1000PF	K	
C173-175			CC73GCH1H101J	CHIP C	100PF	J	
C178			CC73GCH1H101J	CHIP C	100PF	J	
C181,182			CC73GCH1H101J	CHIP C	100PF	J	
C184-186			CC73GCH1H101J	CHIP C	100PF	J	
C189-197			CC73GCH1H101J	CHIP C	100PF	J	
C205-210			CC73GCH1H101J	CHIP C	100PF	J	
C212-229			CC73GCH1H101J	CHIP C	100PF	J	
C230			CK73EB0J106K	CHIP C	10UF	K	
C231,232			CC73GCH1H101J	CHIP C	100PF	J	
C235-242			CC73GCH1H101J	CHIP C	100PF	J	
C244			CC73GCH1H101J	CHIP C	100PF	J	
C245			CK73GB1H104K	CHIP C	0.10UF	K	
C246-248			CC73GCH1H101J	CHIP C	100PF	J	
C251-254			CC73GCH1H101J	CHIP C	100PF	J	
C268			CC73GCH1H101J	CHIP C	100PF	J	
C270,271			CC73GCH1H101J	CHIP C	100PF	J	
C289-292			CC73GCH1H101J	CHIP C	100PF	J	
C702-705			CK73GB1H222K	CHIP C	2200PF	K	
C800,801			CK73GB1H222K	CHIP C	2200PF	K	
C802			C90-5347-05	ELECTRO	22UF	16WV	
C803,804			CC73GCH1H221J	CHIP C	220PF	J	
C805,806			CK73EB1C225K	CHIP C	2.2UF	K	
C807,808			CK73GB1H223K	CHIP C	0.022UF	K	
C809,810			CC73GCH1H221J	CHIP C	220PF	J	
C811,812			CK73GB1H122K	CHIP C	1200PF	K	
C813			CK73GB1H104K	CHIP C	0.10UF	K	
C814			CK73GB1H103K	CHIP C	0.010UF	K	

Ref. No.	Add	New	Parts No.	Description			Destination
C816		✻	C90-5468-05	ELECTRO	2200UF	35WV	
C817			CK73DF1C106Z	CHIP C	10UF	Z	
C818			CK73GB1H103K	CHIP C	0.010UF	K	
C819			CK73GB1H102K	CHIP C	1000PF	K	
C820			CK73FB1C334K	CHIP C	0.33UF	K	
C822,823			CK73GB1H103K	CHIP C	0.010UF	K	
C824,825			CK73GB1H152K	CHIP C	1500PF	K	
C835			C90-5347-05	ELECTRO	22UF	16WV	
C852			CC73GCH1H221J	CHIP C	220PF	J	
C857-859			CC73GCH1H221J	CHIP C	220PF	J	
C870-877			CC73GCH1H221J	CHIP C	220PF	J	
C878,879			CK73GB1H152K	CHIP C	1500PF	K	
C880-883			CC73GCH1H221J	CHIP C	220PF	J	
C884-903			CK73GB1H222K	CHIP C	2200PF	K	
CN11			E40-3273-05	PIN ASSY (15PIN)			
CN13		✻	E41-0297-05	PIN ASSY (30PIN)			
CN14			E40-9744-05	FLAT CABLE CONNECTOR (34PIN)			
CN15		✻	E41-0297-05	PIN ASSY (30PIN)			
CN16		✻	E41-0232-05	PIN ASSY (60PIN)			
CN803,804		✻	E41-0284-05	PIN ASSY (20PIN)			
CN805		✻	E41-0377-05	PIN ASSY (18PIN)			
J803		✻	E58-0934-05	RECTANGULAR RECEPTACLE (36PIN)			
J805			E56-0809-05	CYLINDRICAL RECEPTACLE (13PIN)			
P1-3			E23-0149-05	TERMINAL			
P800,801			E23-0149-05	TERMINAL			
F1			F53-0215-05	FUSE (2A / 63V)			
F800		✻	F53-0212-05	FUSE (UL, CSA : 5A / 125V)			
L1			L40-1005-34	SMALL FIXED INDUCTOR			
L3-5			L40-1005-34	SMALL FIXED INDUCTOR			
L7-11			L40-1005-34	SMALL FIXED INDUCTOR			
L12			L33-1177-05	CHOKE COIL			
L13		✻	L33-1857-05	CHOKE COIL			
L15		✻	L33-1857-05	CHOKE COIL			
L18			L33-1166-05	CHOKE COIL			
L19			L33-1177-05	CHOKE COIL			
L20		✻	L19-0723-05	TRANSFORMER FOR CONVERTER			
L800		✻	L79-0981-05	LINE FILTER			
L801			L33-1082-05	CHOKE COIL			
L802			L40-1005-34	SMALL FIXED INDUCTOR			
X2			L77-2739-05	CRYSTAL RESONATOR (32.768KHZ)			
X3		✻	L77-2749-05	CRYSTAL RESONATOR (10.00MHZ)			
X4		✻	L77-2094-05	CRYSTAL RESONATOR (15.00MHZ)			
R1-8			RK73EB2E471J	CHIP R	470	J 1/4W	
R10			RK73GB2A104J	CHIP R	100K	J 1/10W	
R12			RK73GB2A471J	CHIP R	470	J 1/10W	
R13			RK73GB2A104J	CHIP R	100K	J 1/10W	
R14,15			RK73GB2A471J	CHIP R	470	J 1/10W	
R16			RK73GB2A103J	CHIP R	10K	J 1/10W	
R17			RK73GB2A471J	CHIP R	470	J 1/10W	
R18			RK73GB2A103J	CHIP R	10K	J 1/10W	
R19			RK73GB2A473J	CHIP R	47K	J 1/10W	
R20			RK73GB2A102J	CHIP R	1.0K	J 1/10W	
R22			RK73GB2A102J	CHIP R	1.0K	J 1/10W	

E1 : FGZ201ERF2 **E2** : FGZ201ELF2

⚠ Indicates safety critical components.

PARTS LIST

✻ New parts
Parts without **Parts No.** are not supplied.
Les articles non mentionnes dans le **Parts No.** ne sont pas fournis.
Teile ohne **Parts No.** werden nicht geliefert.

SYNTHESIZER UNIT (X14-9122-71)

Ref. No.	Add	New	Parts No.	Description	Destination
R23-25			RK73GB2A104J	CHIP R 100K J 1/10W	
R30			RK73GB2A473J	CHIP R 47K J 1/10W	
R31			RK73GB2A104J	CHIP R 100K J 1/10W	
R32			RK73GB2A562J	CHIP R 5.6K J 1/10W	
R39			RK73GB2A562J	CHIP R 5.6K J 1/10W	
R40			RK73GB2A104J	CHIP R 100K J 1/10W	E2
R40,41			RK73GB2A104J	CHIP R 100K J 1/10W	E1
R43-50			RK73GB2A102J	CHIP R 1.0K J 1/10W	
R51			RK73GB2A471J	CHIP R 470 J 1/10W	
R53-55			RK73GB2A102J	CHIP R 1.0K J 1/10W	
R56			RK73GB2A104J	CHIP R 100K J 1/10W	E2
R57			RK73GB2A102J	CHIP R 1.0K J 1/10W	
R58,59			RK73GB2A101J	CHIP R 100 J 1/10W	
R60			RK73GB2A104J	CHIP R 100K J 1/10W	
R63			RK73GB2A103J	CHIP R 10K J 1/10W	
R64			RK73GB2A102J	CHIP R 1.0K J 1/10W	
R65			RK73GB2A103J	CHIP R 10K J 1/10W	
R66-68			RK73GB2A102J	CHIP R 1.0K J 1/10W	
R71,72			RK73GB2A473J	CHIP R 47K J 1/10W	
R73			RK73GB2A104J	CHIP R 100K J 1/10W	
R74			RK73GB2A473J	CHIP R 47K J 1/10W	
R75			RK73GB2A104J	CHIP R 100K J 1/10W	
R77			RK73GB2A102J	CHIP R 1.0K J 1/10W	
R78			RK73GB2A471J	CHIP R 470 J 1/10W	
R79			RK73GB2A102J	CHIP R 1.0K J 1/10W	
R81			RK73GB2A102J	CHIP R 1.0K J 1/10W	
R82			RK73GB2A471J	CHIP R 470 J 1/10W	
R83			RK73GB2A102J	CHIP R 1.0K J 1/10W	
R85,86			RK73GB2A102J	CHIP R 1.0K J 1/10W	
R88,89			RK73GB2A102J	CHIP R 1.0K J 1/10W	
R90			RK73GB2A104J	CHIP R 100K J 1/10W	
R92			RK73GB2A102J	CHIP R 1.0K J 1/10W	
R93			RK73GB2A471J	CHIP R 470 J 1/10W	
R94			RK73GB2A102J	CHIP R 1.0K J 1/10W	
R95			RK73GB2A471J	CHIP R 470 J 1/10W	
R96			RK73GB2A102J	CHIP R 1.0K J 1/10W	
R97			RK73GB2A471J	CHIP R 470 J 1/10W	
R98			RK73GB2A104J	CHIP R 100K J 1/10W	
R99,100			RK73GB2A102J	CHIP R 1.0K J 1/10W	
R101			RK73GB2A103J	CHIP R 10K J 1/10W	
R102,103			RK73GB2A102J	CHIP R 1.0K J 1/10W	
R104			RK73GB2A104J	CHIP R 100K J 1/10W	
R105			RK73GB2A470J	CHIP R 47 J 1/10W	
R108			RK73GB2A102J	CHIP R 1.0K J 1/10W	
R109			RK73GB2A473J	CHIP R 47K J 1/10W	
R110			RK73GB2A104J	CHIP R 100K J 1/10W	
R111			RK73GB2A102J	CHIP R 1.0K J 1/10W	
R112			RK73GB2A470J	CHIP R 47 J 1/10W	
R115-117			RK73GB2A102J	CHIP R 1.0K J 1/10W	
R118			RK73GB2A103J	CHIP R 10K J 1/10W	
R119			RK73GB2A102J	CHIP R 1.0K J 1/10W	
R120			RK73GB2A104J	CHIP R 100K J 1/10W	
R121			RK73GB2A102J	CHIP R 1.0K J 1/10W	
R122			RK73GB2A471J	CHIP R 470 J 1/10W	
R123,124			RK73GB2A102J	CHIP R 1.0K J 1/10W	
R125			RK73GB2A471J	CHIP R 470 J 1/10W	
R127			RK73GB2A471J	CHIP R 470 J 1/10W	
R128,129			RK73GB2A102J	CHIP R 1.0K J 1/10W	
R130			RK73GB2A101J	CHIP R 100 J 1/10W	
R131			RK73GB2A102J	CHIP R 1.0K J 1/10W	
R133,134			RK73GB2A102J	CHIP R 1.0K J 1/10W	
R135			RK73GB2A473J	CHIP R 47K J 1/10W	
R136			RK73GB2A471J	CHIP R 470 J 1/10W	
R137,138			RK73GB2A102J	CHIP R 1.0K J 1/10W	
R139			RK73GB2A471J	CHIP R 470 J 1/10W	
R140-142			RK73GB2A102J	CHIP R 1.0K J 1/10W	
R144			RK73GB2A104J	CHIP R 100K J 1/10W	
R146			RK73GB2A102J	CHIP R 1.0K J 1/10W	
R148			RK73GB2A104J	CHIP R 100K J 1/10W	
R150			RK73GB2A104J	CHIP R 100K J 1/10W	
R152,153			RK73GB2A102J	CHIP R 1.0K J 1/10W	
R154			RK73GB2A101J	CHIP R 100 J 1/10W	
R155-157			RK73GB2A102J	CHIP R 1.0K J 1/10W	
R158			RK73GB2A101J	CHIP R 100 J 1/10W	
R159			RK73GB2A471J	CHIP R 470 J 1/10W	
R160			RK73GB2A101J	CHIP R 100 J 1/10W	
R161			RK73GB2A104J	CHIP R 100K J 1/10W	
R162			RK73GB2A473J	CHIP R 47K J 1/10W	
R164			RK73GB2A104J	CHIP R 100K J 1/10W	
R165			RK73GB2A103J	CHIP R 10K J 1/10W	
R167			RK73GB2A473J	CHIP R 47K J 1/10W	
R168			RK73GB2A104J	CHIP R 100K J 1/10W	
R169			RK73GB2A473J	CHIP R 47K J 1/10W	
R171,172			RK73GB2A104J	CHIP R 100K J 1/10W	
R174-177			RK73GB2A471J	CHIP R 470 J 1/10W	
R178,179			RK73GB2A103J	CHIP R 10K J 1/10W	
R180,181			RK73GB2A121J	CHIP R 120 J 1/10W	
R182,183			RK73GB2A471J	CHIP R 470 J 1/10W	
R184-192			RK73GB2A102J	CHIP R 1.0K J 1/10W	
R193-195			RK73GB2A471J	CHIP R 470 J 1/10W	
R199			RK73GB2A104J	CHIP R 100K J 1/10W	
R200			RK73GB2A473J	CHIP R 47K J 1/10W	
R201-204			RK73GB2A104J	CHIP R 100K J 1/10W	
R205			RK73GB2A123J	CHIP R 12K J 1/10W	
R206			RK73GB2A222J	CHIP R 2.2K J 1/10W	
R207,208			RK73GB2A152J	CHIP R 1.5K J 1/10W	
R209,210			RK73GB2A104J	CHIP R 100K J 1/10W	
R211			RK73GB2A474J	CHIP R 470K J 1/10W	
R212			RK73GB2A473J	CHIP R 47K J 1/10W	
R213			RK73GB2A104J	CHIP R 100K J 1/10W	
R214			RK73GB2A473J	CHIP R 47K J 1/10W	
R215-218			RK73GB2A104J	CHIP R 100K J 1/10W	
R219,220			RK73GB2A223J	CHIP R 22K J 1/10W	
R222			RK73GB2A101J	CHIP R 100 J 1/10W	
R223			RK73GB2A223J	CHIP R 22K J 1/10W	
R224			RK73GB2A104J	CHIP R 100K J 1/10W	
R225			RK73GB2A221J	CHIP R 220 J 1/10W	
R226			RK73GB2A223J	CHIP R 22K J 1/10W	
R227			RK73GB2A101J	CHIP R 100 J 1/10W	
R228			RK73GB2A223J	CHIP R 22K J 1/10W	

E1 : FGZ201ERF2 **E2** : FGZ201ELF2

⚠ Indicates safety critical components.

PARTS LIST

✻ New parts
Parts without **Parts No.** are not supplied.
Les articles non mentionnes dans le **Parts No.** ne sont pas fournis.
Teile ohne **Parts No.** werden nicht geliefert.

SYNTHESIZER UNIT (X14-9122-71)

Ref. No.	Add	New	Parts No.	Description				Destination
R230			RK73GB2A223J	CHIP R	22K	J	1/10W	
R232			RK73GB2A102J	CHIP R	1.0K	J	1/10W	
R233,234			RK73GB2A223J	CHIP R	22K	J	1/10W	
R237			RK73GB2A223J	CHIP R	22K	J	1/10W	
R241			RK73GB2A561J	CHIP R	560	J	1/10W	
R245			RK73GB2A472J	CHIP R	4.7K	J	1/10W	
R247			RK73GB2A473J	CHIP R	47K	J	1/10W	
R250			RK73GB2A473J	CHIP R	47K	J	1/10W	
R253			RK73GB2A102J	CHIP R	1.0K	J	1/10W	
R254			RK73GB2A473J	CHIP R	47K	J	1/10W	
R256			RK73GB2A104J	CHIP R	100K	J	1/10W	
R257			RK73GB2A103J	CHIP R	10K	J	1/10W	
R264			RK73GB2A473J	CHIP R	47K	J	1/10W	
R265-267			RK73EB2E473J	CHIP R	47K	J	1/4W	
R268			RK73GH1J223D	CHIP R	22K	D	1/16W	
R269			RK73GB2A103J	CHIP R	10K	J	1/10W	
R270			RK73GB2A223J	CHIP R	22K	J	1/10W	
R271			RK73GH1J472D	CHIP R	4.7K	D	1/16W	
R273		✻	RK73EH2E223D	CHIP R	22K	D	1/4W	
R274			RK73GB2A103J	CHIP R	10K	J	1/10W	
R275			RK73GB2A224J	CHIP R	220K	J	1/10W	
R276			RK73GB2A222J	CHIP R	2.2K	J	1/10W	
R277			RK73GB2A101J	CHIP R	100	J	1/10W	
R278			RK73GB2A103J	CHIP R	10K	J	1/10W	
R279			RK73GB2A104J	CHIP R	100K	J	1/10W	
R280			RK73GB2A224J	CHIP R	220K	J	1/10W	
R282			RK73GH1J123D	CHIP R	12K	D	1/16W	
R283			RK73GH1J222D	CHIP R	2.2K	D	1/16W	
R284			RK73GB2A104J	CHIP R	100K	J	1/10W	
R286			RK73GB2A334J	CHIP R	330K	J	1/10W	
R287			RK73GB2A104J	CHIP R	100K	J	1/10W	
R288			RK73EB2E220J	CHIP R	22	J	1/4W	
R289			RK73GB2A224J	CHIP R	220K	J	1/10W	
R290-292			RK73GB2A472J	CHIP R	4.7K	J	1/10W	
R293			RK73GB2A822J	CHIP R	8.2K	J	1/10W	
R294		✻	R92-3352-05	CHIP R	0.47	J	1/2W	
R295			RK73GB2A103J	CHIP R	10K	J	1/10W	
R296,297			RK73GB2A104J	CHIP R	100K	J	1/10W	
R298			RK73GB2A473J	CHIP R	47K	J	1/10W	
R299			RK73GH1J104D	CHIP R	100K	D	1/16W	
R300			RK73GH1J563D	CHIP R	56K	D	1/16W	
R301			RK73GH1J333D	CHIP R	33K	D	1/16W	
R302		✻	RK73GH1J683D	CHIP R	68K	D	1/16W	
R303			RK73GB2A471J	CHIP R	470	J	1/10W	
R304			RK73GB2A473J	CHIP R	47K	J	1/10W	
R305			RK73GB2A184J	CHIP R	180K	J	1/10W	
R306-309			RK73GH1J333D	CHIP R	33K	D	1/16W	
R310			RK73GB2A104J	CHIP R	100K	J	1/10W	
R311			RK73GB2A682J	CHIP R	6.8K	J	1/10W	
R312			RK73GB2A103J	CHIP R	10K	J	1/10W	
R313			RK73GB2A473J	CHIP R	47K	J	1/10W	
R314			RK73GB2A103J	CHIP R	10K	J	1/10W	
R316			RK73GB2A104J	CHIP R	100K	J	1/10W	
R318,319			RK73GB2A103J	CHIP R	10K	J	1/10W	
R320			RK73GB2A334J	CHIP R	330K	J	1/10W	

Ref. No.	Add	New	Parts No.	Description				Destination
R323			RK73EB2E222J	CHIP R	2.2K	J	1/4W	
R324			RK73GB2A222J	CHIP R	2.2K	J	1/10W	
R326			RK73GB2A221J	CHIP R	220	J	1/10W	
R327			RK73GB2A224J	CHIP R	220K	J	1/10W	
R328			RK73GH1J124D	CHIP R	120K	D	1/16W	
R329			RK73EB2E100J	CHIP R	10	J	1/4W	
R330			RK73EB2E222J	CHIP R	2.2K	J	1/4W	
R331			RK73GB2A221J	CHIP R	220	J	1/10W	
R332			RK73GH1J223D	CHIP R	22K	D	1/16W	
R333,334			RK73GB2A562J	CHIP R	5.6K	J	1/10W	
R335			RK73GB2A222J	CHIP R	2.2K	J	1/10W	
R336			R92-3099-05	CHIP R	0.22	J	1/2W	
R337			RK73GB2A104J	CHIP R	100K	J	1/10W	
R338			RK73GB2A103J	CHIP R	10K	J	1/10W	
R339			RK73GB2A223J	CHIP R	22K	J	1/10W	
R340			RK73GB2A473J	CHIP R	47K	J	1/10W	
R341			RK73GB2A474J	CHIP R	470K	J	1/10W	
R342			RK73GH1J333D	CHIP R	33K	D	1/16W	
R343			RK73GB2A222J	CHIP R	2.2K	J	1/10W	
R344			RK73GB2A101J	CHIP R	100	J	1/10W	
R345			RK73GH1J103D	CHIP R	10K	D	1/16W	
R346			RK73GB2A224J	CHIP R	220K	J	1/10W	
R347			RK73GB2A104J	CHIP R	100K	J	1/10W	
R348			RK73GB2A223J	CHIP R	22K	J	1/10W	
R349,350			RK73EB2E471J	CHIP R	470	J	1/4W	
R353			RK73GB2A103J	CHIP R	10K	J	1/10W	
R356-359			RK73GB2A104J	CHIP R	100K	J	1/10W	
R360,361			RK73EB2E471J	CHIP R	470	J	1/4W	
R362			RK73GB2A104J	CHIP R	100K	J	1/10W	
R363,364			RK73GB2A102J	CHIP R	1.0K	J	1/10W	
R365			RK73GB2A223J	CHIP R	22K	J	1/10W	
R366,367			RK73GB2A101J	CHIP R	100	J	1/10W	
R368,369			RK73GB2A102J	CHIP R	1.0K	J	1/10W	
R370,371			RK73GB2A473J	CHIP R	47K	J	1/10W	
R373-375			RK73GB2A102J	CHIP R	1.0K	J	1/10W	
R376			RK73GB2A104J	CHIP R	100K	J	1/10W	
R377,378			RK73GB2A473J	CHIP R	47K	J	1/10W	
R379			RK73GB2A102J	CHIP R	1.0K	J	1/10W	
R385			RK73GB2A104J	CHIP R	100K	J	1/10W	
R388-394			RK73GB2A104J	CHIP R	100K	J	1/10W	
R395,396			RK73GB2A224J	CHIP R	220K	J	1/10W	
R397			RK73GB2A104J	CHIP R	100K	J	1/10W	
R398			RK73GB2A102J	CHIP R	1.0K	J	1/10W	
R399			RK73GB2A104J	CHIP R	100K	J	1/10W	
R400			RK73EB2E220J	CHIP R	22	J	1/4W	
R401			RK73EB2E100J	CHIP R	10	J	1/4W	
R700-702			RK73GB2A223J	CHIP R	22K	J	1/10W	
R703			RK73GB2A123J	CHIP R	12K	J	1/10W	
R803-807			RK73EB2E332J	CHIP R	3.3K	J	1/4W	
R808			RK73EB2E750J	CHIP R	75	J	1/4W	
R809,810			RK73EB2E101J	CHIP R	100	J	1/4W	
R811			RK73EB2E750J	CHIP R	75	J	1/4W	
R812,813			RK73EB2E102J	CHIP R	1.0K	J	1/4W	
R814			RK73EB2E121J	CHIP R	120	J	1/4W	
R818			RK73EB2E750J	CHIP R	75	J	1/4W	

E1 : FGZ201ERF2 **E2** : FGZ201ELF2

⚠ Indicates safety critical components.

PARTS LIST

✻ New parts
Parts without **Parts No.** are not supplied.
Les articles non mentionnes dans le **Parts No.** ne sont pas fournis.
Teile ohne **Parts No.** werden nicht geliefert.

SYNTHESIZER UNIT (X14-9122-71)

Ref. No.	Add	New	Parts No.	Description	Destination
R821,822			RK73EB2E102J	CHIP R 1.0K J 1/4W	
R823,824			RK73EB2E222J	CHIP R 2.2K J 1/4W	
R825			RK73EB2E103J	CHIP R 10K J 1/4W	
R826			RK73EB2E102J	CHIP R 1.0K J 1/4W	
R827			RK73EB2E750J	CHIP R 75 J 1/4W	
R830,831			RK73EB2E332J	CHIP R 3.3K J 1/4W	
R832,833			RK73EB2E102J	CHIP R 1.0K J 1/4W	
R835,836			RK73GB2A223J	CHIP R 22K J 1/10W	
R837			RK73EB2E222J	CHIP R 2.2K J 1/4W	
R838			RK73GB2A123J	CHIP R 12K J 1/10W	
R839			RK73GB2A103J	CHIP R 10K J 1/10W	
R840,841			RK73GB2A223J	CHIP R 22K J 1/10W	
R843			RK73GB2A103J	CHIP R 10K J 1/10W	
R844			RK73GB2A223J	CHIP R 22K J 1/10W	
R845			RK73GB2A102J	CHIP R 1.0K J 1/10W	
R846			RK73GB2A103J	CHIP R 10K J 1/10W	
R847-849			RK73GB2A223J	CHIP R 22K J 1/10W	
R850			RK73GB2A103J	CHIP R 10K J 1/10W	
R851			RK73GB2A472J	CHIP R 4.7K J 1/10W	
R852			RK73GB2A473J	CHIP R 47K J 1/10W	
R865,866			RK73GB2A224J	CHIP R 220K J 1/10W	
R877			RK73EB2E220J	CHIP R 22 J 1/4W	
R892		✻	RK73EB2E224J	CHIP R 220K J 1/4W	
R893			RK73EB2E332J	CHIP R 3.3K J 1/4W	
R894,895			RK73EB2E222J	CHIP R 2.2K J 1/4W	
R896			RK73EB2E220J	CHIP R 22 J 1/4W	
R897			RK73EB2E222J	CHIP R 2.2K J 1/4W	
R898			RK73GB2A103J	CHIP R 10K J 1/10W	
R899,900			RK73GB2A223J	CHIP R 22K J 1/10W	
W4			R92-1252-05	CHIP R 0 OHM J 1/16W	
W8			R92-1252-05	CHIP R 0 OHM J 1/16W	
D1			MA3056-M	ZENER DIODE	
D2			MA143	DIODE	
D5			MA143	DIODE	
D7			DAN202U	DIODE	
D9			1SR154-400	DIODE	
D10			HZS6B1L	ZENER DIODE	
D11		✻	MA3047-H	ZENER DIODE	
D12		✻	HZS161L	ZENER DIODE	
D13			HZM20N(B)	ZENER DIODE	
D14			MA143	DIODE	
D15			DAP202U	DIODE	
D16			1SS184	DIODE	
D17			EC31QS06TE12L	DIODE	
D18,19			1SR154-400	DIODE	
D20			MA143	DIODE	
D21			1SS184	DIODE	
D22,23			HZM16N(B2)	ZENER DIODE	
D24			1SS184	DIODE	
D25			EC31QS06TE12L	DIODE	
D26			HZM16N(B2)	ZENER DIODE	
D27			HZS6B1L	ZENER DIODE	
D28			DAN202U	DIODE	
D30			HZS11B2L	ZENER DIODE	

Ref. No.	Add	New	Parts No.	Description	Destination
D31			1SS184	DIODE	
D32		✻	MA3047-H	ZENER DIODE	
D35			DAN202U	DIODE	
D701,702			MA3220-H	ZENER DIODE	
D800-804			MA3220-H	ZENER DIODE	
D805		✻	MAZK270D	ZENER DIODE	
D806			MA3056WA	ZENER DIODE	
D807			DAN202U	DIODE	
D810			DAN202U	DIODE	
D811,812			HZS6B1L	ZENER DIODE	
D814,815			MA3056WA	ZENER DIODE	
D816			MA143	DIODE	
D817			AM01Z	DIODE	
D818		✻	DE5LC20U	DIODE	
D819			MA143	DIODE	
D820			U5ZA27C(TE24L)	DIODE	
D821			MA143	DIODE	
D823			MA3056WA	ZENER DIODE	
D824			DAN202U	DIODE	
D825			HZS7C2L	ZENER DIODE	
D834			MA3220-H	ZENER DIODE	
D837			MA143	DIODE	
D839			DAN202U	DIODE	
IC1		✻	S-80943CNMC	ANALOGUE IC	
IC2			TC7WHU04FU	MOS-IC	
IC3		✻	M306NBFCTFP5Q0	MICROCONTROLLER IC	
IC5		✻	M30624FGAFP9P3	MI-COM IC	
IC7		✻	S-24CS08AFJ-TB	ROM IC	
IC8		✻	TJA1054	MOS-IC	
IC9		✻	S-80943CNMC	ANALOGUE IC	
IC10			NJM4565MD	ANALOGUE IC	
IC12			TC4066BFT(N)	MOS-IC	
IC13			NJM2120M	ANALOGUE IC	
IC16			TC7WH126FU	MOS-IC	
IC17			HA12187FP	ANALOGUE IC	
IC18			S-816A50AMC-T2	ANALOGUE IC	
IC19			BA00ASFP	ANALOGUE IC	
IC20			BA9743AFV	ANALOGUE IC	
IC21		✻	S-80925CNMC	ANALOGUE IC	
IC800			TDA8579T-T	ANALOGUE IC	
Q1,2			DTA124EUA	DIGITAL TRANSISTOR	
Q4			DTC144EUA	DIGITAL TRANSISTOR	
Q5			DTC124EUA	DIGITAL TRANSISTOR	
Q6			DTA124EUA	DIGITAL TRANSISTOR	
Q7-11			DTC124EUA	DIGITAL TRANSISTOR	
Q12			DTC144EUA	DIGITAL TRANSISTOR	
Q15			DTA144EUA	DIGITAL TRANSISTOR	
Q16			DTC144EUA	DIGITAL TRANSISTOR	
Q17			2SD2114K	TRANSISTOR	
Q18			DTA144EUA	DIGITAL TRANSISTOR	
Q19			2SB1188(Q,R)	TRANSISTOR	
Q20			2SC4081	TRANSISTOR	
Q24			2SC4081	TRANSISTOR	
Q25,26			DTC124EUA	DIGITAL TRANSISTOR	
Q27			2SB1203-FA	TRANSISTOR	

E1 : FGZ201ERF2 **E2** : FGZ201ELF2

⚠ Indicates safety critical components.

PARTS LIST

✻ New parts
Parts without **Parts No.** are not supplied.
Les articles non mentionnes dans le **Parts No.** ne sont pas fournis.
Teile ohne **Parts No.** werden nicht geliefert.

Ref. No.	Add	New	Parts No.	Description	Destination
Q28			2SA1576A	TRANSISTOR	
Q29			2SC4081	TRANSISTOR	
Q30			2SB1203-FA	TRANSISTOR	
Q31			FMY6	TRANSISTOR	
Q32			2SC4081	TRANSISTOR	
Q33,34			2SA1576A	TRANSISTOR	
Q35			DTC144EUA	DIGITAL TRANSISTOR	
Q36			DTA144EUA	DIGITAL TRANSISTOR	
Q37			2SC4081	TRANSISTOR	
Q38		✻	IMT1A	TRANSISTOR	
Q39			DTA144EUA	DIGITAL TRANSISTOR	
Q40			FMY6	TRANSISTOR	
Q41			DTA144EUA	DIGITAL TRANSISTOR	
Q42			2SJ327Z	FET	
Q43			FMY6	TRANSISTOR	
Q44			2SC4081	TRANSISTOR	
Q46			2SB1188(Q,R)	TRANSISTOR	
Q47			FMY6	TRANSISTOR	
Q48		✻	IMT1A	TRANSISTOR	
Q49			2SJ327Z	FET	
Q50			DTA124EUA	DIGITAL TRANSISTOR	
Q53			DTC144EUA	DIGITAL TRANSISTOR	
Q55,56			DTC124EUA	DIGITAL TRANSISTOR	
Q57			2SA1576A	TRANSISTOR	
Q58			DTC124EUA	DIGITAL TRANSISTOR	
Q61			DTC144EUA	DIGITAL TRANSISTOR	
Q64			2SA1576A	TRANSISTOR	
Q66,67			DTA144EUA	DIGITAL TRANSISTOR	
Q68,69			DTC144EUA	DIGITAL TRANSISTOR	
Q700,701			2SC4081	TRANSISTOR	
Q702			DTA124EUA	DIGITAL TRANSISTOR	
Q800,801			DTA124EUA	DIGITAL TRANSISTOR	
Q802			DTC124EUA	DIGITAL TRANSISTOR	
Q803-806			2SC4081	TRANSISTOR	
Q807			DTA124EUA	DIGITAL TRANSISTOR	
Q808			2SC4081	TRANSISTOR	
Q809			DTA124EUA	DIGITAL TRANSISTOR	
Q810			2SB1203-FA	TRANSISTOR	
Q811			2SC4081	TRANSISTOR	
TH800		✻	NTH4G42B104F01	THERMISTOR	
SWITCH UNIT (X16-1860-00)					
D1-5		✻	B30-1601-05	LED	
C1-12			CK73GB1H103K	CHIP C 0.010UF K	
CN2		✻	E41-0019-05	FLAT CABLE CONNECTOR (10PIN)	
R1-5		✻	RK73EB2E182J	CHIP R 1.8K J 1/4W	
R6-10			RK73GB2A101J	CHIP R 100 J 1/10W	
D6-8			MA3056WA	ZENER DIODE	
D9			MA3082-M	ZENER DIODE	
ELECTRIC UNIT (X25-9412-71)					
C1-3			CK73GB1C104K	CHIP C 0.10UF K	
C5			CK73GB1H104K	CHIP C 0.10UF K	
C6			CK73GB1H103K	CHIP C 0.010UF K	

SYNTHESIZER UNIT (X14-9122-71)

Ref. No.	Add	New	Parts No.	Description	Destination
C7			CK73GB1C104K	CHIP C 0.10UF K	
C8			CK73GB1H104K	CHIP C 0.10UF K	
C9			CK73GB1C104K	CHIP C 0.10UF K	
C11			CK73GB1H104K	CHIP C 0.10UF K	
C12,13			CK73GB1H103K	CHIP C 0.010UF K	
C14,15			CK73GB1C104K	CHIP C 0.10UF K	
C16			CC73GCH1H471J	CHIP C 470PF J	
C17-22			CK73GB1C104K	CHIP C 0.10UF K	
C23			CK73GB1H103K	CHIP C 0.010UF K	
C24-26		✻	C93-1291-05	CHIP C 10UF K	
C27			CK73GB1H104K	CHIP C 0.10UF K	
C28			CK73GB1C104K	CHIP C 0.10UF K	
C29			CK73GB1H103K	CHIP C 0.010UF K	
C30		✻	C93-1291-05	CHIP C 10UF K	
C31-33			CK73GB1H103K	CHIP C 0.010UF K	
C34		✻	C93-1291-05	CHIP C 10UF K	
C37			CK73GB1H103K	CHIP C 0.010UF K	
C38		✻	C93-1290-05	CHIP C 22UF K	
C39			CK73GB1H103K	CHIP C 0.010UF K	
C40,41			CK73GB1C104K	CHIP C 0.10UF K	
C42		✻	C93-1291-05	CHIP C 10UF K	
C43			CK73GB1H103K	CHIP C 0.010UF K	
C44,45			CK73GB1C104K	CHIP C 0.10UF K	
C49-52			CK73GB1C104K	CHIP C 0.10UF K	
C53,54			CC73GCH1H180J	CHIP C 18PF J	
C57			CK73GB1H103K	CHIP C 0.010UF K	
C58			CC73GCH1H471J	CHIP C 470PF J	
C59,60			CK73GB1H103K	CHIP C 0.010UF K	
C61		✻	C93-1291-05	CHIP C 10UF K	
C62			CK73GB1C104K	CHIP C 0.10UF K	
C63			CK73GB1H103K	CHIP C 0.010UF K	
C67			CK73GB1H104K	CHIP C 0.10UF K	
C68,69			CC73GCH1H270J	CHIP C 27PF J	
C74			CK73GB1H103K	CHIP C 0.010UF K	
C76			CK73GB1H103K	CHIP C 0.010UF K	
C77,78		✻	C93-1290-05	CHIP C 22UF K	
C79,80		✻	C93-1291-05	CHIP C 10UF K	
C81-85			CK73GB1C104K	CHIP C 0.10UF K	
C86-102			CC73GCH1H510J	CHIP C 51PF J	
C103,104			CC73GCH1H330J	CHIP C 33PF J	
C105-107			CC73GCH1H510J	CHIP C 51PF J	
C109			CK73GB1C104K	CHIP C 0.10UF K	
C110-113			CC73GCH1H510J	CHIP C 51PF J	
C125-133			CC73GCH1H330J	CHIP C 33PF J	
C136-141			CC73GCH1H330J	CHIP C 33PF J	
C148,149			CC73GCH1H330J	CHIP C 33PF J	
C177,178			CK73GB1C104K	CHIP C 0.10UF K	
C180			CK73GB1H103K	CHIP C 0.010UF K	
C181			CK73GB1H104K	CHIP C 0.10UF K	
C183-190			CK73GB1H104K	CHIP C 0.10UF K	
C192,193			CK73GB1H104K	CHIP C 0.10UF K	
C194			CC73GCH1H331J	CHIP C 330PF J	
C195-200			CC73GCH1H101J	CHIP C 100PF J	
C201			CK73GB1H103K	CHIP C 0.010UF K	
C209			CC73GCH1H330J	CHIP C 33PF J	

E1 : FGZ201ERF2 **E2** : FGZ201ELF2

⚠ Indicates safety critical components.

PARTS LIST

✻ New parts
Parts without **Parts No.** are not supplied.
Les articles non mentionnes dans le **Parts No.** ne sont pas fournis.
Teile ohne **Parts No.** werden nicht geliefert.

ELECTRIC UNIT (X25-9412-71)

Ref. No.	Add	New	Parts No.	Description	Destination
C211			CK73GB1H103K	CHIP C 0.010UF K	
C213			CK73GB1A474K	CHIP C 0.47UF K	
CN30		✻	E41-0234-05	SOCKET FOR PIN ASSY (60PIN)	
CN31			E40-9631-05	FLAT CABLE CONNECTOR (10PIN)	
CN32			E40-9706-05	PIN ASSY (7PIN)	
L1-3			L40-1001-78	SMALL FIXED INDUCTOR (10UH)	
L4			L40-1001-31	SMALL FIXED INDUCTOR (10UH)	
L5-7			L40-1001-78	SMALL FIXED INDUCTOR (10UH)	
L9			L40-1001-78	SMALL FIXED INDUCTOR (10UH)	
L12,13			L40-6805-34	SMALL FIXED INDUCTOR	
L14-18			L92-0329-05	CHIP FERRITE	
X1			L77-2770-05	CRYSTAL RESONATOR (7.08MHZ)	
X2		✻	L77-2818-05	CRYSTAL RESONATOR (3.579545MHZ)	
CP1-8			R90-1014-05	MULTI-COMP 100 X4	
CP17-22			R90-1014-05	MULTI-COMP 100 X4	
CP23			R90-1019-05	MULTI-COMP 100 X2	
CP24			R90-0714-05	MULTI-COMP 10K X4	
CP25			R90-0726-05	MULTI-COMP 10K X2	
CP26			R90-1014-05	MULTI-COMP 100 X4	
CP27			R90-1019-05	MULTI-COMP 100 X2	
CP28-35			R90-1014-05	MULTI-COMP 100 X4	
CP36			R90-1019-05	MULTI-COMP 100 X2	
CP37-40			R90-1014-05	MULTI-COMP 100 X4	
R1,2			RK73EB2E471J	CHIP R 470 J 1/4W	
R3			RK73GB2A103J	CHIP R 10K J 1/10W	
R5			RK73GB2A271J	CHIP R 270 J 1/10W	
R6			RK73GH1J301D	CHIP R 300 D 1/16W	
R7			RK73GB2A271J	CHIP R 270 J 1/10W	
R8			RK73GB2A102J	CHIP R 1.0K J 1/10W	
R12-16			RK73GB2A473J	CHIP R 47K J 1/10W	
R20			RK73GB2A271J	CHIP R 270 J 1/10W	
R23			RK73GB2A222J	CHIP R 2.2K J 1/10W	
R26-28			RK73GB2A101J	CHIP R 100 J 1/10W	
R29			RK73GB2A302J	CHIP R 3.0K J 1/10W	
R30,31			RK73GB2A101J	CHIP R 100 J 1/10W	
R40			RK73GB2A622J	CHIP R 6.2K J 1/10W	
R41-45			RK73GB2A103J	CHIP R 10K J 1/10W	
R46-48			RK73GB2A101J	CHIP R 100 J 1/10W	
R53-55			RK73GB2A221J	CHIP R 220 J 1/10W	
R56			RK73GB2A104J	CHIP R 100K J 1/10W	
R58			RK73GB2A473J	CHIP R 47K J 1/10W	
R59			RK73GB2A104J	CHIP R 100K J 1/10W	
R76-80			RK73GB2A101J	CHIP R 100 J 1/10W	
R81			RK73GB2A102J	CHIP R 1.0K J 1/10W	
R83			RK73GB2A102J	CHIP R 1.0K J 1/10W	
R85			RK73GB2A103J	CHIP R 10K J 1/10W	
R87			RK73GB2A103J	CHIP R 10K J 1/10W	
R88			RK73GB2A102J	CHIP R 1.0K J 1/10W	
R90-92			RK73GB2A102J	CHIP R 1.0K J 1/10W	
R93-95			RK73GB2A101J	CHIP R 100 J 1/10W	
R96			RK73GB2A471J	CHIP R 470 J 1/10W	
R97			RK73GB2A101J	CHIP R 100 J 1/10W	
R98			RK73GB2A471J	CHIP R 470 J 1/10W	

Ref. No.	Add	New	Parts No.	Description	Destination
R99			RK73GB2A101J	CHIP R 100 J 1/10W	
R100			RK73GB2A103J	CHIP R 10K J 1/10W	
R101			RK73GB2A471J	CHIP R 470 J 1/10W	
R102			RK73GB2A103J	CHIP R 10K J 1/10W	
R103			RK73GB2A101J	CHIP R 100 J 1/10W	
R110			RK73GB2A101J	CHIP R 100 J 1/10W	
R113			RK73GB2A101J	CHIP R 100 J 1/10W	
R114			RK73GB2A102J	CHIP R 1.0K J 1/10W	
R115			RK73GB2A101J	CHIP R 100 J 1/10W	
R116			RK73GB2A102J	CHIP R 1.0K J 1/10W	
R117			RK73GB2A104J	CHIP R 100K J 1/10W	
R118			RK73GB2A103J	CHIP R 10K J 1/10W	
R119			RK73GB2A104J	CHIP R 100K J 1/10W	
R120-122			RK73GB2A103J	CHIP R 10K J 1/10W	
R123			RK73GB2A104J	CHIP R 100K J 1/10W	
R125-127			RK73GB2A101J	CHIP R 100 J 1/10W	
R144			RK73GB2A104J	CHIP R 100K J 1/10W	
R145			RK73GB2A103J	CHIP R 10K J 1/10W	
R148			RK73GB2A302J	CHIP R 3.0K J 1/10W	
R151			RK73GB2A201J	CHIP R 200 J 1/10W	
R156,157			RK73GB2A333J	CHIP R 33K J 1/10W	
R166			RK73GB2A103J	CHIP R 10K J 1/10W	
R168-171			RK73GB2A100J	CHIP R 10 J 1/10W	
R172			RK73GB2A103J	CHIP R 10K J 1/10W	
R173			RK73GB2A473J	CHIP R 47K J 1/10W	
R233			RK73GB2A242J	CHIP R 2.4K J 1/10W	
R256-258			RK73GB2A103J	CHIP R 10K J 1/10W	
R271-273			RK73GB2A103J	CHIP R 10K J 1/10W	
R276,277			RK73GB2A101J	CHIP R 100 J 1/10W	
R279,280			RK73GB2A104J	CHIP R 100K J 1/10W	
R286,287			RK73GB2A103J	CHIP R 10K J 1/10W	
R288			RK73GB2A152J	CHIP R 1.5K J 1/10W	
R289			RK73GB2A104J	CHIP R 100K J 1/10W	
R290			RK73GB2A152J	CHIP R 1.5K J 1/10W	
R291			RK73GB2A562J	CHIP R 5.6K J 1/10W	
R292			RK73GB2A102J	CHIP R 1.0K J 1/10W	
R294,295			RK73GB2A104J	CHIP R 100K J 1/10W	
R296,297			RK73EB2E471J	CHIP R 470 J 1/4W	
R298			RK73GB2A331J	CHIP R 330 J 1/10W	
R299			RK73GB2A392J	CHIP R 3.9K J 1/10W	
R300-304			RK73GB2A101J	CHIP R 100 J 1/10W	
R305			RK73GB2A100J	CHIP R 10 J 1/10W	
R308			RK73GB2A471J	CHIP R 470 J 1/10W	
R309-311			RK73GB2A103J	CHIP R 10K J 1/10W	
W234			R92-1252-05	CHIP R 0 OHM J 1/16W	
W241			R92-1252-05	CHIP R 0 OHM J 1/16W	
W246			R92-1252-05	CHIP R 0 OHM J 1/16W	
W248,249			R92-1252-05	CHIP R 0 OHM J 1/16W	
W312-316			R92-1252-05	CHIP R 0 OHM J 1/16W	
D2			HZM6.8FA	ZENER DIODE	
D3			DAN202U	DIODE	
D4,5			DA204U	DIODE	
IC2			TC9246F	MOS-IC	
IC3			TC7SHU04F	MOS-IC	

E1 : FGZ201ERF2 **E2** : FGZ201ELF2

⚠ Indicates safety critical components.

PARTS LIST

✻ New parts
Parts without **Parts No.** are not supplied.
Les articles non mentionnes dans le **Parts No.** ne sont pas fournis.
Teile ohne **Parts No.** werden nicht geliefert.

Ref. No.	Add	New	Parts No.	Description			Destination
IC4		✻	HD64412FI	MOS-IC			
IC5		✻	MSM5118165FP60	DRAM IC			
IC6			BU3616K	MOS-IC			
IC7			TC7SHU04F	MOS-IC			
IC10			TC7SH32FU	MOS-IC			
IC11		✻	MSM5118165FP60	DRAM IC			
IC12		✻	HD6437041AG57E	MICROCONTROLLER IC			
IC19		✻	MBM29F160TE9P6	MEMORY IC			
IC20			TC7SHU04F	MOS-IC			
IC22			TC7SHU04F	MOS-IC			
IC23			TC7SET08FU	MOS-IC			
IC24		✻	MSM5258MS-K	ANALOGUE IC			
IC26			TA78DS05F	ANALOGUE IC			
IC27,28			TC7SHU04F	MOS-IC			
Q2,3			DTC124EUA	DIGITAL TRANSISTOR			
Q4,5			DTA124EUA	DIGITAL TRANSISTOR			
A1			W02-3152-05	OSCILLATING MODULE			
VIDEO UNIT (X35-4250-00)							
C1			C92-1486-05	ELECTRO	100UF	25WV	
C2			CK73GB1H103K	CHIP C	0.010UF	K	
C31			C92-1486-05	ELECTRO	100UF	25WV	
C32			CK73GB1H103K	CHIP C	0.010UF	K	
C33			CC73GCH1H101J	CHIP C	100PF	J	
C34			CK73FB1C105K	CHIP C	1.0UF	K	
C35		✻	C93-1222-05	CHIP C	0.22UF	J	
C37			C93-1127-05	PPS-C	0.10UF	J	
C38,39		✻	C93-1289-05	CHIP C	10UF	K	
C40			C92-1610-05	ELECTRO	220UF	16WV	
C41			C92-0671-05	ELECTRO	10UF	16WV	
C42			CK73GB1C104K	CHIP C	0.10UF	K	
C43,44			CK73FB1C154K	CHIP C	0.15UF	K	
C45,46			C92-1610-05	ELECTRO	220UF	16WV	
C47			C92-0671-05	ELECTRO	10UF	16WV	
C48			CK73GB1H103K	CHIP C	0.010UF	K	
C64			CK73GB1H103K	CHIP C	0.010UF	K	
C65			C92-0676-05	ELECTRO	10UF	25WV	
C66			CK73FB1C105K	CHIP C	1.0UF	K	
C67			CK73GB1H103K	CHIP C	0.010UF	K	
C68			C92-0676-05	ELECTRO	10UF	25WV	
C69			CK73FB1C105K	CHIP C	1.0UF	K	
C101			C92-0672-05	ELECTRO	22UF	16WV	
C102,103			CK73GB1H103K	CHIP C	0.010UF	K	
C104			CC73GCH1H561J	CHIP C	560PF	J	
C105,106			CK73GB1C104K	CHIP C	0.10UF	K	
C107			CK73GB1H103K	CHIP C	0.010UF	K	
C108			CC73GCH1H120J	CHIP C	12PF	J	
C109-112			CK73GB1H103K	CHIP C	0.010UF	K	
C113			CC73GCH1E102J	CHIP C	1000PF	J	
C114			CC73GCH1H101J	CHIP C	100PF	J	
C115,116			CK73GB1H103K	CHIP C	0.010UF	K	
C117			CC73GCH1H470J	CHIP C	47PF	J	
C118-120			CK73GB1H103K	CHIP C	0.010UF	K	
C123-125			CK73GB1H103K	CHIP C	0.010UF	K	

ELECTRIC UNIT (X25-9412-71)

Ref. No.	Add	New	Parts No.	Description			Destination
C200-202			C92-0671-05	ELECTRO	10UF	16WV	
C203			C92-1488-05	NP-ELECT	10UF	25WV	
C204,205			C92-0671-05	ELECTRO	10UF	16WV	
C206			CK73FB1C105K	CHIP C	1.0UF	K	
C207			CC73GCH1H331J	CHIP C	330PF	J	
C208			CC73GCH1E102J	CHIP C	1000PF	J	
C209			CC73GCH1H151J	CHIP C	150PF	J	
C210			CK73GB1H472K	CHIP C	4700PF	K	
C211			CK73EB1A475K	CHIP C	4.7UF	K	
C212			CK73FB1C105K	CHIP C	1.0UF	K	
C214			C92-0687-05	ELECTRO	2.2UF	50WV	
C215,216			C92-0672-05	ELECTRO	22UF	16WV	
C217			C92-1610-05	ELECTRO	220UF	16WV	
C218-221			CK73GB1H103K	CHIP C	0.010UF	K	
C222			C92-0687-05	ELECTRO	2.2UF	50WV	
C225			CK73FB1C105K	CHIP C	1.0UF	K	
C226			CK73FB1C154K	CHIP C	0.15UF	K	
C227			CK73GB1H104K	CHIP C	0.10UF	K	
C228			CK73GB1H223K	CHIP C	0.022UF	K	
C229			CK73FB1C105K	CHIP C	1.0UF	K	
C230			CC73GCH1H080D	CHIP C	8.0PF	D	
C232			CK73GB1H103K	CHIP C	0.010UF	K	
C233			C92-0672-05	ELECTRO	22UF	16WV	
C234-239			C92-0675-05	ELECTRO	4.7UF	25WV	
C240			C92-0672-05	ELECTRO	22UF	16WV	
C241,242			CK73GB1H103K	CHIP C	0.010UF	K	
C243			C92-0672-05	ELECTRO	22UF	16WV	
C244-246			CK73FB1C105K	CHIP C	1.0UF	K	
C247-249			C92-0687-05	ELECTRO	2.2UF	50WV	
C250-252			CK73GB1H103K	CHIP C	0.010UF	K	
C253,254			C92-0671-05	ELECTRO	10UF	16WV	
C255			C92-0672-05	ELECTRO	22UF	16WV	
C256			CK73GB1H103K	CHIP C	0.010UF	K	
C259			C92-0672-05	ELECTRO	22UF	16WV	
C264			CK73GB1H223K	CHIP C	0.022UF	K	
C265			C92-0672-05	ELECTRO	22UF	16WV	
C266			CK73GB1H223K	CHIP C	0.022UF	K	
C267			CK73FB1C474K	CHIP C	0.47UF	K	
C268			CK73GB1H102K	CHIP C	1000PF	K	
C269			C92-0676-05	ELECTRO	10UF	25WV	
C270		✻	C92-1821-05	ELECTRO	15UF	35WV	
C271			CK73GB1H103K	CHIP C	0.010UF	K	
C272			C92-0676-05	ELECTRO	10UF	25WV	
C273			CK73GB1H103K	CHIP C	0.010UF	K	
C274			C92-0676-05	ELECTRO	10UF	25WV	
C275			C92-0671-05	ELECTRO	10UF	16WV	
C276			CK73FB1C105K	CHIP C	1.0UF	K	
C277			C92-0687-05	ELECTRO	2.2UF	50WV	
C286			C92-1486-05	ELECTRO	100UF	25WV	
C287			C92-0676-05	ELECTRO	10UF	25WV	
C288			C92-1486-05	ELECTRO	100UF	25WV	
C289			CK73GB1H103K	CHIP C	0.010UF	K	
C290			CC73GCH1H390J	CHIP C	39PF	J	
C291			CC73GCH1H030C	CHIP C	3.0PF	C	
C292			CC73GCH1H330J	CHIP C	33PF	J	

E1 : FGZ201ERF2 **E2** : FGZ201ELF2

⚠ Indicates safety critical components.

PARTS LIST

✻ New parts
Parts without **Parts No.** are not supplied.
Les articles non mentionnes dans le **Parts No.** ne sont pas fournis.
Teile ohne **Parts No.** werden nicht geliefert.

VIDEO UNIT (X35-4250-00)

Ref. No.	Add	New	Parts No.	Description	Destination
C296-299			CC73GCH1H100D	CHIP C 10PF D	
C306			CK73FB1C105K	CHIP C 1.0UF K	
C307-310			CK73GB1H102K	CHIP C 1000PF K	
C313-318			CK73GB1H102K	CHIP C 1000PF K	
C324,325			CK73GB1H102K	CHIP C 1000PF K	
C328-342			CK73GB1H102K	CHIP C 1000PF K	
C343			CC73GCH1H101J	CHIP C 100PF J	
C344-350			CC73GCH1H121J	CHIP C 120PF J	
C351,352			CC73GCH1H101J	CHIP C 100PF J	
C353			CC73GCH1H331J	CHIP C 330PF J	
C356			CC73GCH1H121J	CHIP C 120PF J	
C357			CC73GCH1H331J	CHIP C 330PF J	
C358			CC73GCH1H510J	CHIP C 51PF J	
C359-361			CC73GCH1H331J	CHIP C 330PF J	
C362			CC73GCH1H121J	CHIP C 120PF J	
C501			CC73GCH1H060D	CHIP C 6.0PF D	
C502			CC73GCH1H030C	CHIP C 3.0PF C	
C503			CC73GCH1H220J	CHIP C 22PF J	
C504			CC73GCH1H120J	CHIP C 12PF J	
C505			CK73EB1E105K	CHIP C 1.0UF K	
C506		✻	C93-1290-05	CHIP C 22UF J	
C507			CK73EB1E105K	CHIP C 1.0UF K	
C508			CC73GCH1H121J	CHIP C 120PF J	
CN1		✻	E41-0378-05	PIN ASSY (18PIN)	
CN2			E40-9781-05	FLAT CABLE CONNECTOR (34PIN)	
CN3		✻	E41-0231-05	FLAT CABLE CONNECTOR (30PIN)	
CN4			E40-9484-05	PIN ASSY (2PIN)	
CN5			E40-9637-05	FLAT CABLE CONNECTOR (4PIN)	
P1-6			E23-0747-05	TERMINAL	
F1			F53-0198-05	FUSE (1.5A / 63V)	
		✻	J74-1394-12	RIGID PRINTED WIRING BOARD	
L31			L33-1177-05	CHOKE COIL	
L32		✻	L33-1893-05	CHOKE COIL	
L34			L33-1166-05	CHOKE COIL	
L35,36		✻	L19-0731-05	TRANSFORMER FOR CONVERTER	
L101			L40-2205-34	SMALL FIXED INDUCTOR (22UH)	
L102			L40-6895-34	SMALL FIXED INDUCTOR	
L200-203			L40-1005-34	SMALL FIXED INDUCTOR	
L205-209			L40-4705-34	SMALL FIXED INDUCTOR	
L211-213			L40-1005-34	SMALL FIXED INDUCTOR	
L215			L40-1005-34	SMALL FIXED INDUCTOR	
L216			L40-4705-34	SMALL FIXED INDUCTOR	
L501,502			L40-1095-34	SMALL FIXED INDUCTOR (1UH)	
X200			L78-0549-05	RESONATOR (15.734KHZ)	
X201		✻	L77-2818-05	CRYSTAL RESONATOR (3.579545MHZ)	
R1			RK73GB2A103J	CHIP R 10K J 1/10W	
R2			R92-0365-05	CHIP R 1.0K J 1/2W	
R3			RK73GB2A222J	CHIP R 2.2K J 1/10W	
R4			RK73GB2A103J	CHIP R 10K J 1/10W	
R5			RK73EB2E392J	CHIP R 3.9K J 1/4W	
R36			RK73GB2A393J	CHIP R 39K J 1/10W	
R37			RK73GB2A104J	CHIP R 100K J 1/10W	

Ref. No.	Add	New	Parts No.	Description	Destination
R38			RK73GB2A102J	CHIP R 1.0K J 1/10W	
R39		✻	RK73GB2A390J	CHIP R 39 J 1/10W	
R40			RK73GB2A103J	CHIP R 10K J 1/10W	
R41			RK73GB2A473J	CHIP R 47K J 1/10W	
R42			RK73GB2A823J	CHIP R 82K J 1/10W	
R43		✻	R92-3359-05	CHIP R 2.0 J 1/2W	
R44			R92-0365-05	CHIP R 1.0K J 1/2W	
R45		✻	R92-3359-05	CHIP R 2.0 J 1/2W	
R46,47			RK73GB2A102J	CHIP R 1.0K J 1/10W	
R48		✻	RK73GH1J912D	CHIP R 9.1K D 1/16W	
R49			RK73GH1J472D	CHIP R 4.7K D 1/16W	
R50			RK73GB2A103J	CHIP R 10K J 1/10W	
R51			RK73GB2A102J	CHIP R 1.0K J 1/10W	
R54,55		✻	R92-3359-05	CHIP R 2.0 J 1/2W	
R56			RK73GB2A472J	CHIP R 4.7K J 1/10W	
R101,102			RK73GB2A683J	CHIP R 68K J 1/10W	
R103			RK73GB2A105J	CHIP R 1.0M J 1/10W	
R104			RK73GB2A472J	CHIP R 4.7K J 1/10W	
R105			RK73GB2A243J	CHIP R 24K J 1/10W	
R106			RK73GB2A153J	CHIP R 15K J 1/10W	
R107			RK73GB2A472J	CHIP R 4.7K J 1/10W	
R108			RK73GB2A473J	CHIP R 47K J 1/10W	
R109			RK73GB2A822J	CHIP R 8.2K J 1/10W	
R110			RK73GB2A272J	CHIP R 2.7K J 1/10W	
R111-114			RK73GB2A101J	CHIP R 100 J 1/10W	
R116,117			RK73GB2A472J	CHIP R 4.7K J 1/10W	
R119			RK73GB2A101J	CHIP R 100 J 1/10W	
R121			RK73GB2A472J	CHIP R 4.7K J 1/10W	
R122			RK73GB2A101J	CHIP R 100 J 1/10W	
R123			RK73GB2A272J	CHIP R 2.7K J 1/10W	
R124			RK73GB2A332J	CHIP R 3.3K J 1/10W	
R126			RK73GB2A472J	CHIP R 4.7K J 1/10W	
R127			RK73GB2A101J	CHIP R 100 J 1/10W	
R128			RK73GB2A331J	CHIP R 330 J 1/10W	
R130			RK73GB2A472J	CHIP R 4.7K J 1/10W	
R132			RK73GB2A472J	CHIP R 4.7K J 1/10W	
R133			RK73GB2A101J	CHIP R 100 J 1/10W	
R135			RK73GB2A472J	CHIP R 4.7K J 1/10W	
R136			RK73GB2A105J	CHIP R 1.0M J 1/10W	
R137			RK73GB2A101J	CHIP R 100 J 1/10W	
R139			RK73GB2A472J	CHIP R 4.7K J 1/10W	
R140			RK73GB2A561J	CHIP R 560 J 1/10W	
R141,142			RK73GB2A101J	CHIP R 100 J 1/10W	
R143			RK73GB2A561J	CHIP R 560 J 1/10W	
R148-153			RK73GB2A101J	CHIP R 100 J 1/10W	
R158			RK73GB2A472J	CHIP R 4.7K J 1/10W	
R160			RK73GB2A472J	CHIP R 4.7K J 1/10W	
R200			RK73GB2A361J	CHIP R 360 J 1/10W	
R201			RK73GB2A391J	CHIP R 390 J 1/10W	
R202			RK73GB2A182J	CHIP R 1.8K J 1/10W	
R203			RK73GB2A302J	CHIP R 3.0K J 1/10W	
R204			RK73GB2A102J	CHIP R 1.0K J 1/10W	
R205			RK73GB2A914J	CHIP R 910K J 1/10W	
R207			RK73GB2A512J	CHIP R 5.1K J 1/10W	
R208-211			RK73GB2A121J	CHIP R 120 J 1/10W	

E1 : FGZ201ERF2 **E2** : FGZ201ELF2

⚠ Indicates safety critical components.

PARTS LIST

✻ New parts
Parts without **Parts No.** are not supplied.
Les articles non mentionnes dans le **Parts No.** ne sont pas fournis.
Teile ohne **Parts No.** werden nicht geliefert.

VIDEO UNIT (X35-4250-00)

Ref. No.	Add	New	Parts No.	Description	Destination
R213-215			RK73GB2A101J	CHIP R 100 J 1/10W	
R216			RK73GB2A182J	CHIP R 1.8K J 1/10W	
R217			RK73GB2A272J	CHIP R 2.7K J 1/10W	
R219			RK73GB2A105J	CHIP R 1.0M J 1/10W	
R220			RK73GB2A332J	CHIP R 3.3K J 1/10W	
R221			RK73GB2A103J	CHIP R 10K J 1/10W	
R222,223			RK73GB2A222J	CHIP R 2.2K J 1/10W	
R224,225			RK73EB2E220J	CHIP R 22 J 1/4W	
R228			RK73GB2A752J	CHIP R 7.5K J 1/10W	
R229			RK73GB2A272J	CHIP R 2.7K J 1/10W	
R231			RK73GB2A101J	CHIP R 100 J 1/10W	
R232-234			RK73EB2E101J	CHIP R 100 J 1/4W	
R235,236			RK73GB2A101J	CHIP R 100 J 1/10W	
R240-242			RK73EB2E101J	CHIP R 100 J 1/4W	
R246,247			RK73GB2A103J	CHIP R 10K J 1/10W	
R248			RK73GB2A102J	CHIP R 1.0K J 1/10W	
R250			RK73GB2A102J	CHIP R 1.0K J 1/10W	
R254-257			RK73GB2A103J	CHIP R 10K J 1/10W	
R263			RK73EB2E561J	CHIP R 560 J 1/4W	
R264			RK73GB2A103J	CHIP R 10K J 1/10W	
R265,266			RK73GB2A101J	CHIP R 100 J 1/10W	
R276			RK73GB2A331J	CHIP R 330 J 1/10W	
R280,281			RK73GB2A102J	CHIP R 1.0K J 1/10W	
R304			RK73GB2A271J	CHIP R 270 J 1/10W	
R305,306			RK73GB2A562J	CHIP R 5.6K J 1/10W	
R308			RK73FB2B561J	CHIP R 560 J 1/8W	
R310			RK73GB2A104J	CHIP R 100K J 1/10W	
R501			RK73GB2A101J	CHIP R 100 J 1/10W	
R502,503			RK73GB2A392J	CHIP R 3.9K J 1/10W	
VR30			R32-0244-05	SEMI FIXED VARIABLE RESISTOR (2K)	
VR101			R32-0244-05	SEMI FIXED VARIABLE RESISTOR (2K)	
VR102			R32-0235-05	SEMI FIXED VARIABLE RESISTOR (10K)	
W1			R92-1252-05	CHIP R 0 OHM J 1/16W	
W3			R92-1252-05	CHIP R 0 OHM J 1/16W	
W6			R92-1252-05	CHIP R 0 OHM J 1/16W	
W106-114			R92-1252-05	CHIP R 0 OHM J 1/16W	
W117			R92-1252-05	CHIP R 0 OHM J 1/16W	
W120			R92-1252-05	CHIP R 0 OHM J 1/16W	
W203			R92-1252-05	CHIP R 0 OHM J 1/16W	
D31			RB060L-40	DIODE	
D32			MA3110-M	ZENER DIODE	
D62			DAN202U	DIODE	
D101			MA8051-M	ZENER DIODE	
D102			MA335	VARIABLE CAPACITANCE DIODE	
D201-206			DA204U	DIODE	
D208-210			DAN202U	DIODE	
IC31			TL5001ID	ANALOGUE IC	
IC101			NJM2107F	ANALOGUE IC	
IC102		✻	TC160G11AF1146	MOS-IC	
IC200,201		✻	NJM2535V	ANALOGUE IC	
IC202			NJW1303V	ANALOGUE IC	
IC203			AN2546FH-A	ANALOGUE IC	
IC205			S-24C01B	ROM IC	
IC207			NJM4580V	ANALOGUE IC	

Ref. No.	Add	New	Parts No.	Description	Destination
IC209			TC7W34FU	MOS-IC	
IC211		✻	NJU7222U30	ANALOGUE IC	
IC212		✻	NJU7223DL1-50	ANALOGUE IC	
IC217			TC7S14F	MOS-IC	
Q1			2SC4081	TRANSISTOR	
Q2			2SB1203-FA	TRANSISTOR	
Q3			DTA124EUA	DIGITAL TRANSISTOR	
Q4			DTC124EUA	DIGITAL TRANSISTOR	
Q31			2SC4081	TRANSISTOR	
Q32			2SA1576A	TRANSISTOR	
Q33			2SJ327Z	FET	
Q35-37			2SD1803	TRANSISTOR	
Q38			DTA124EUA	DIGITAL TRANSISTOR	
Q39			DTC124EUA	DIGITAL TRANSISTOR	
Q40			2SA1576A	TRANSISTOR	
Q41			2SC4081	TRANSISTOR	
Q42			2SJ327Z	FET	
Q43			DTC124EUA	DIGITAL TRANSISTOR	
Q101			2SC2411K	TRANSISTOR	
Q102			DTC124EUA	DIGITAL TRANSISTOR	
Q203			2SC4097	TRANSISTOR	
Q204			2SA1577	TRANSISTOR	
Q205			2SC4081	TRANSISTOR	
Q206			2SA1576A	TRANSISTOR	
Q209,210			DTC124EUA	DIGITAL TRANSISTOR	

E1 : FGZ201ERF2 **E2** : FGZ201ELF2

⚠ Indicates safety critical components.

FGZ201ELF2/ERF2

SPECIFICATIONS

Monitor Unit

Screen size ..... 7.0 inches wide
Display system ..... Transparent TN LCD panel
Drive system ..... TFT active matrix system
Number of pixels ..... 336,960 pixels (480 H x 234 V x RGB)
Effective pixels 99.99%
Pixel arrangement ..... RGB striped arrangement
Back lighting ..... Cold cathode tube

General

Operating voltage ..... 14.4V DC (11~16V)
Operational temperature range ..... -10°C to +60°C
Storage temperature range ..... -30°C to +80°C

KENWOOD follows a policy of continuous advancements in development.
For this reason specifications may be changed without notice.
Although the effective pixels for the liquid crystal panel is given as 99.99% or more, 0.01% of pixels may not light or may light incorrectly.

KENWOOD CORPORATION
2967-3, Ishikawa-machi, Hachioji-shi, Tokyo, 192-8525 Japan

KENWOOD USA CORPORATION
P.O. Box 22745, 2201 East Dominguez Street, Long Beach, CA 90801-5745, U.S.A.

KENWOOD ELECTRONICS CANADA INC.
6070 Kestrel Road, Mississauga, Ontario, Canada L5T 1S8

KENWOOD ELECTRONICS LATIN AMERICA S.A.
P.O. Box 55-2791 Paitilla, Plaza Credicorp Bank Panama,
Piso 9, Oficina 901, Calle 50, Panama, Rep. de Panama

KENWOOD ELECTRONICS BRASIL LTDA.
Alameda Ministro Rocha Azevedo No. 456,
Edificio Jaú, 10o Andar, Cerqueira César, Cep 0140-001,
São Paulo-SP-Brasil

KENWOOD ELECTRONICS UK LIMITED
Kenwood House, Dwight Road, Watford, Herts, WD18 9EB, United Kingdom

KENWOOD ELECTRONICS DEUTSCHLAND GMBH
Rembrücker-Str. 15, 63150 Heusenstamm, Germany

KENWOOD ELECTRONICS FRANCE S.A.
13, Boulevard Ney, 75018 Paris, France

KENWOOD ELECTRONICS BELGIUM N.V.
Leuvensesteenweg 248 J, 1800 Vilvoorde, Belgium

KENWOOD ELECTRONICS ITALIA S.p.A.
Via G. Sirtori 7/9, 20129 Milano, Italy

KENWOOD IBÉRICA S.A.
Bolivia, 239-08020 Barcelona, Spain

KENWOOD ELECTRONICS AUSTRALIA PTY. LTD. (A.C.N. 001 499 074)
16 Giffnock Avenue, Centrecourt Estate, North Ryde,
N.S.W. 2113, Australia

KENWOOD ELECTRONICS (HONG KONG) LTD.
Unit 3712-3724, Level 37, Tower 1, Metroplaza, 223 Hing Fong Road, Kwai Fong, N.T.,
Hong Kong

KENWOOD ELECTRONICS GULF FZE
P.O. Box 61318, Jebel Ali, Dubai, U.A.E.

KENWOOD ELECTRONICS (THAILAND) CO., LTD.
2019 New Pechburi Road, Bangkapi, Huaykwang, Bangkok, 10320 Thailand

KENWOOD ELECTRONICS SINGAPORE PTE. LTD.
1 Genting Lane, #07-00, Kenwood Building, Singapore, 349544

KENWOOD ELECTRONICS (MALAYSIA) SDN BHD
#4.01 Level 4, Wisma Academy Lot 4A, Jalan 19/1, 46300 Petaling Jaya, Selangor Darul Ehsan,
Malaysia